PRELIMINARY MANUAL

D820X

2CH-DIGITAL-RECORDER

VOLUME III

SERVICING

VOLUME I OPERATING Order No. 10.27.0580
VOLUME II DIAGRAMS Order No. 10.27.0590
DOS-DISK (not yet available) Order No. 10.27.0620

VOLUME I and VOLUME II and VOLUME III Order No. 10.27.0610

Prepared and edited by
STUDER REVOX
TECHNICAL DOCUMENTATION
Althardstrasse 10
CH-8105 Regensdorf-Zürich
Copyright by Willi Studer AG
Printed in Switzerland, Order no. 10.27.0600 (Ed. 1186)

STUDER is a registered trade mark of
STUDER INTERNATIONAL AG Regensdorf

PUBLISHED: 02/87

TABLE OF CONTENTS D820X VOLUME III

ASSEMBLY LOCATION ..... PAGE 2
INTERCONNECTION ..... PAGE 3
CONNECTOR LOCATION ..... PAGE 6
MENUE STRUCTURE ..... PAGE 9

D820X: SIGNAL DESCRIPTION ..... SECTION 1
SYSCON MONITOR ..... SECTION 2
COMMANDS SYSCON-HARDWARE ..... SECTION 3
MASTER MONITOR ..... SECTION 4
SIGNAL WIRE LIST ..... SECTION 5

ASSEMBLY LOCATION

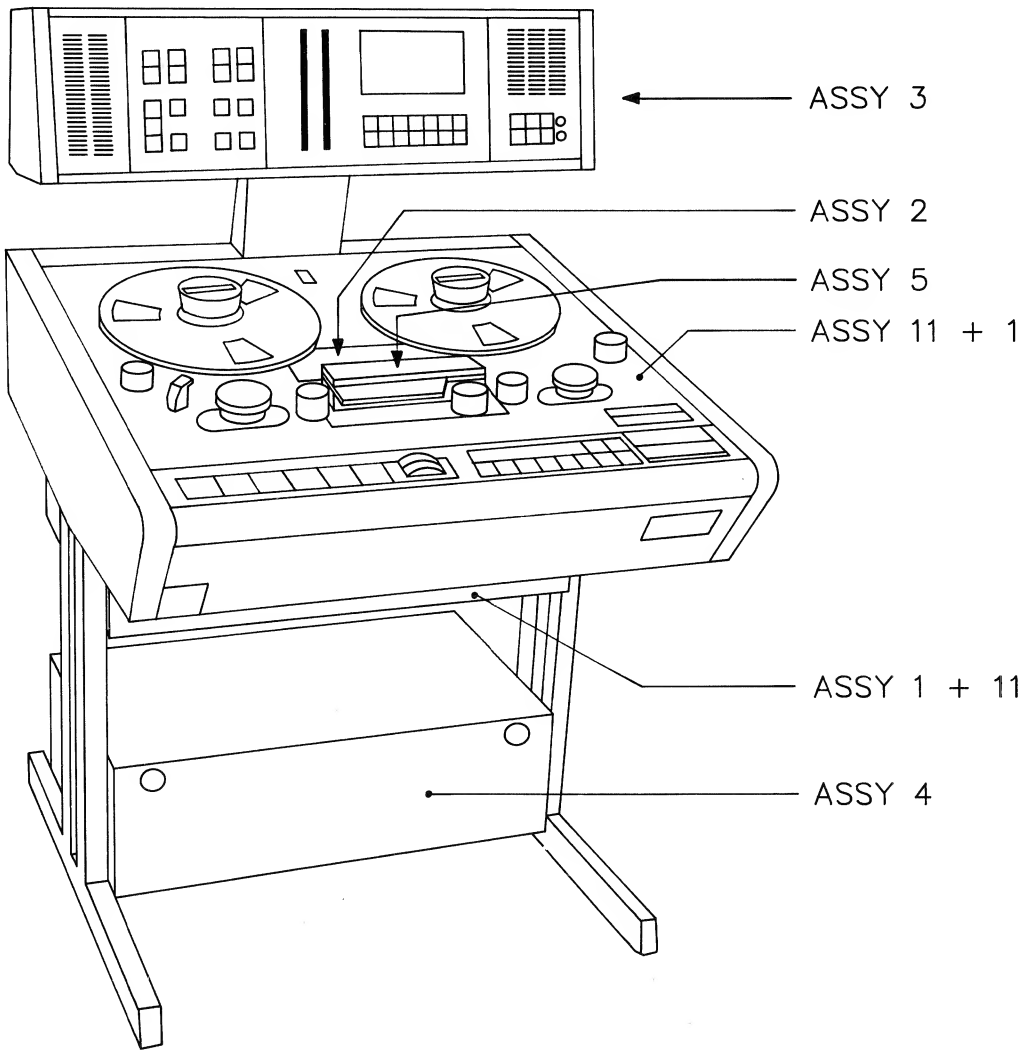

PUBLISHED: 02/87

INTERCONNECTION

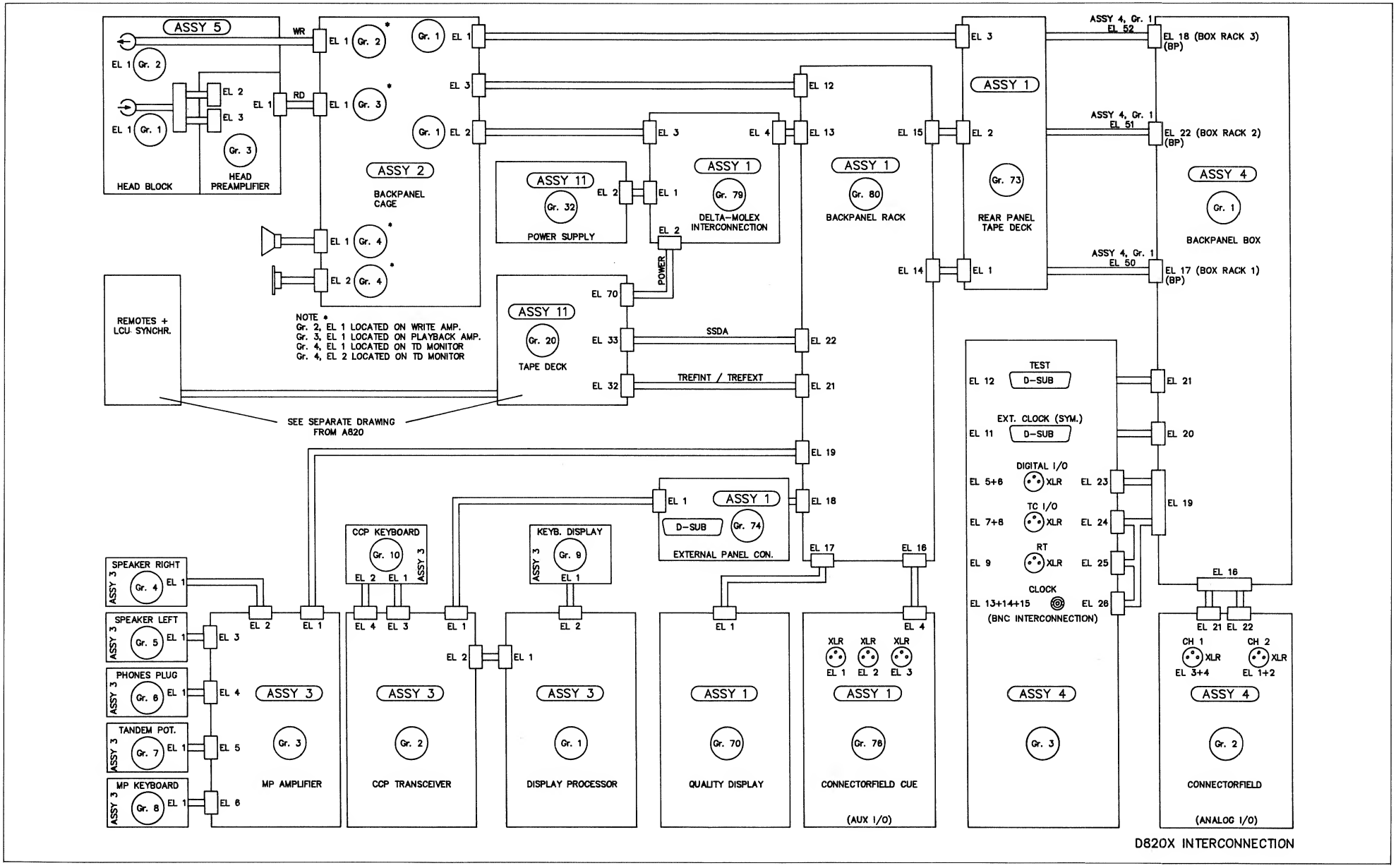

INTERCONNECTION (ALL 1.820.XX = ASSY 11)

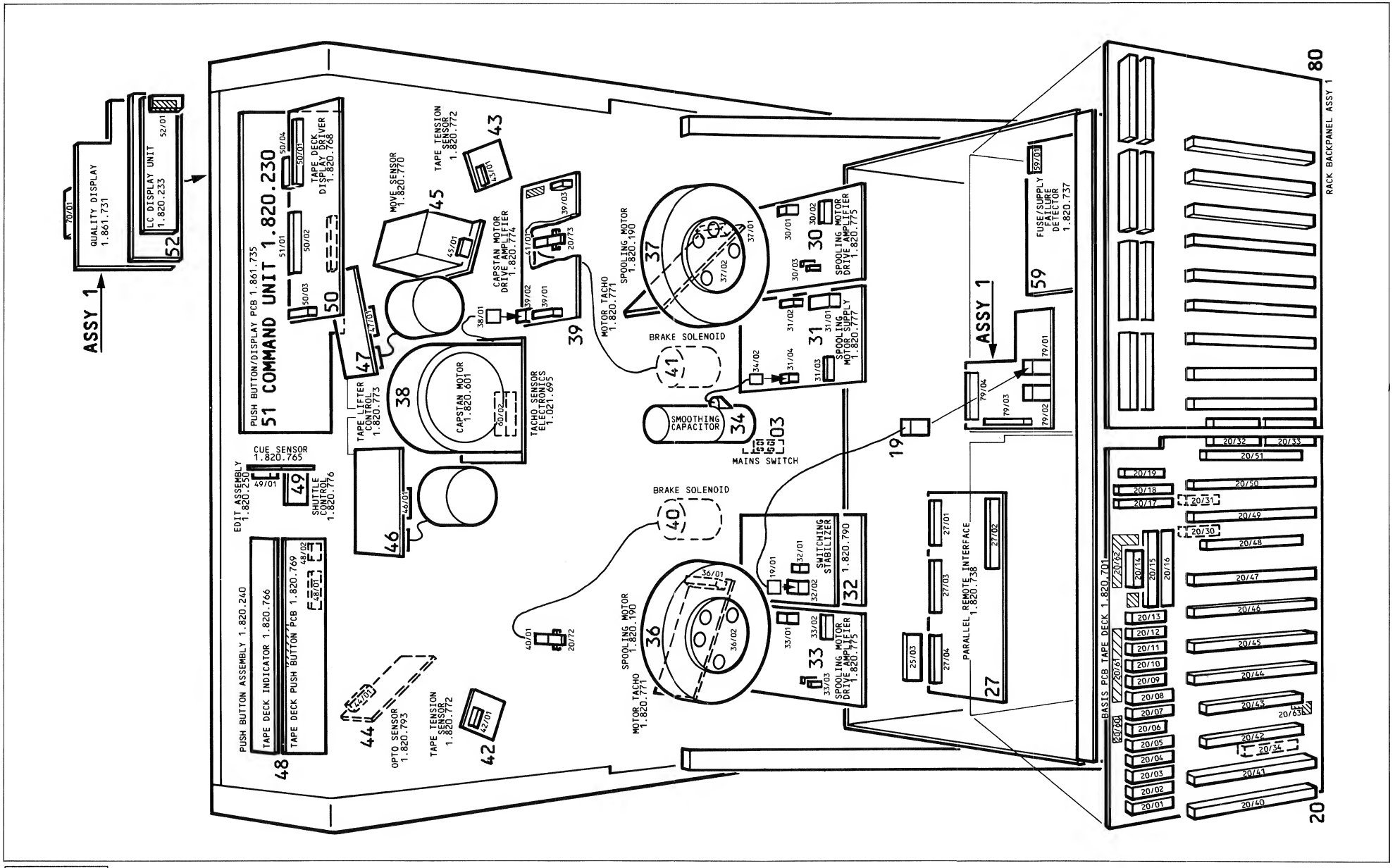

INTERCONNECTION (ALL 1.820.XX = ASSY 11)

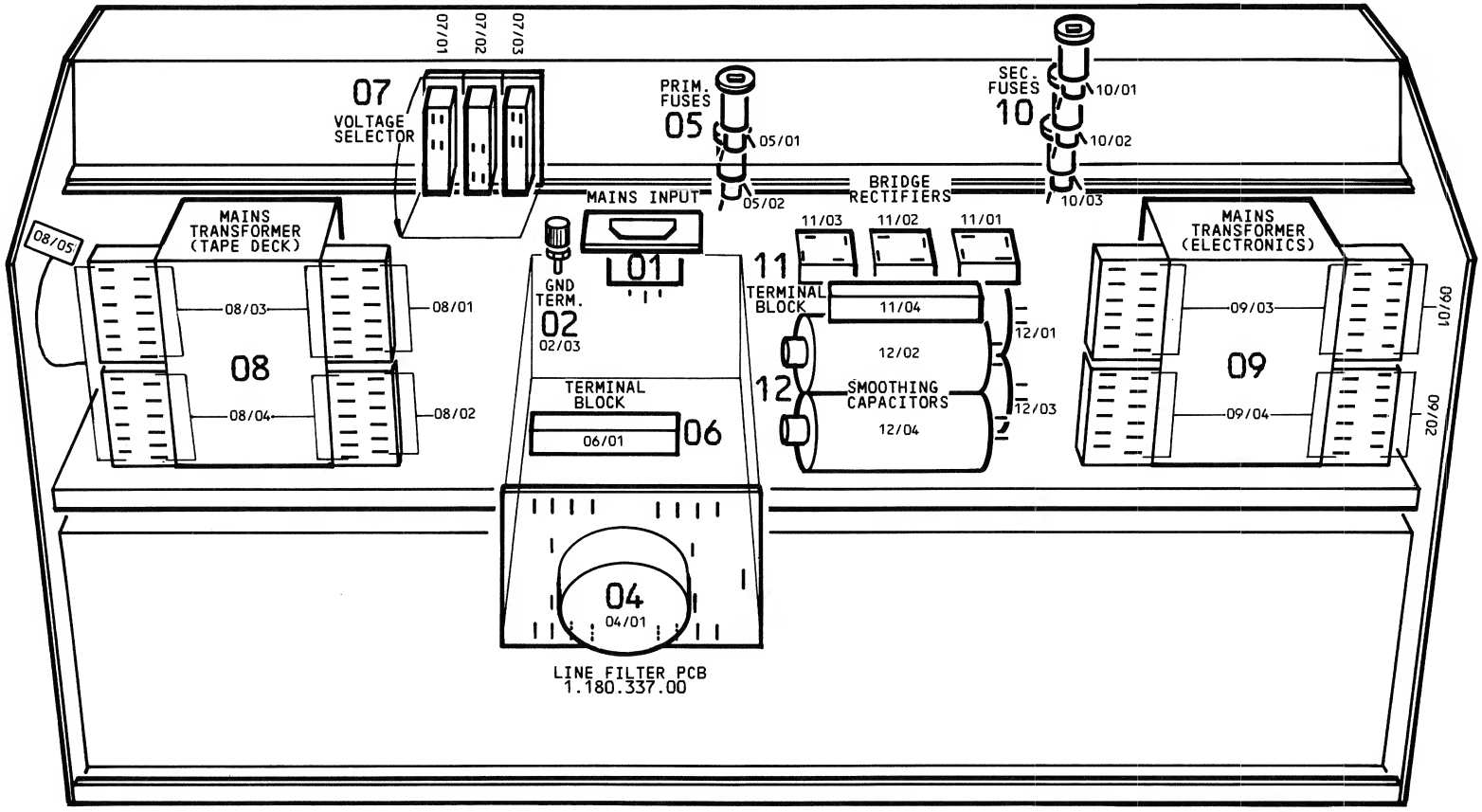

PUBLISHED: 02/87

CONNECTOR LOCATION PAGE 1

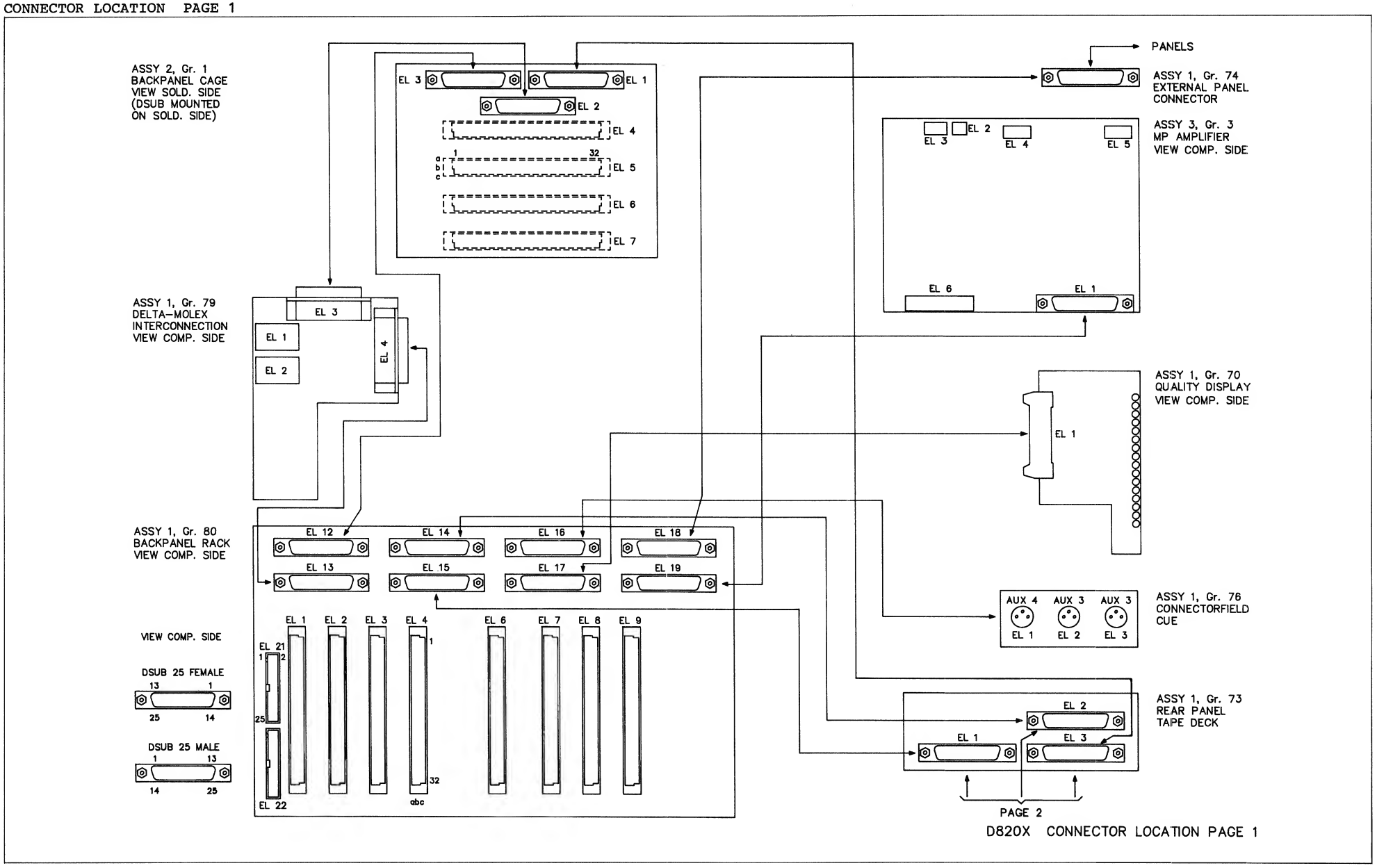

D820X CONNECTOR LOCATION PAGE 1

CONNECTOR LOCATION PAGE 2

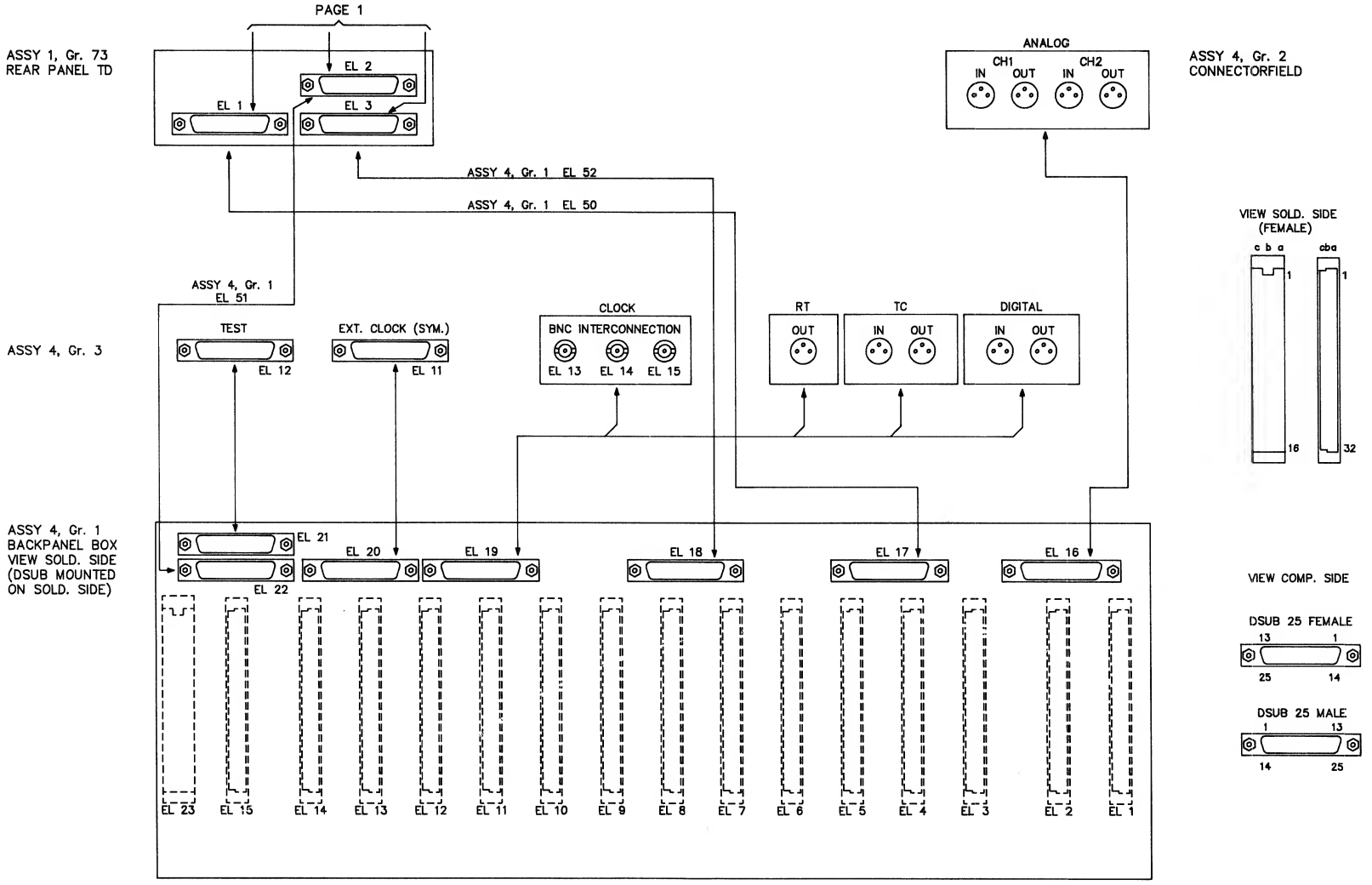

D820X CONNECTOR LOCATION PAGE 2

CONNECTOR LOCATION PAGE 3

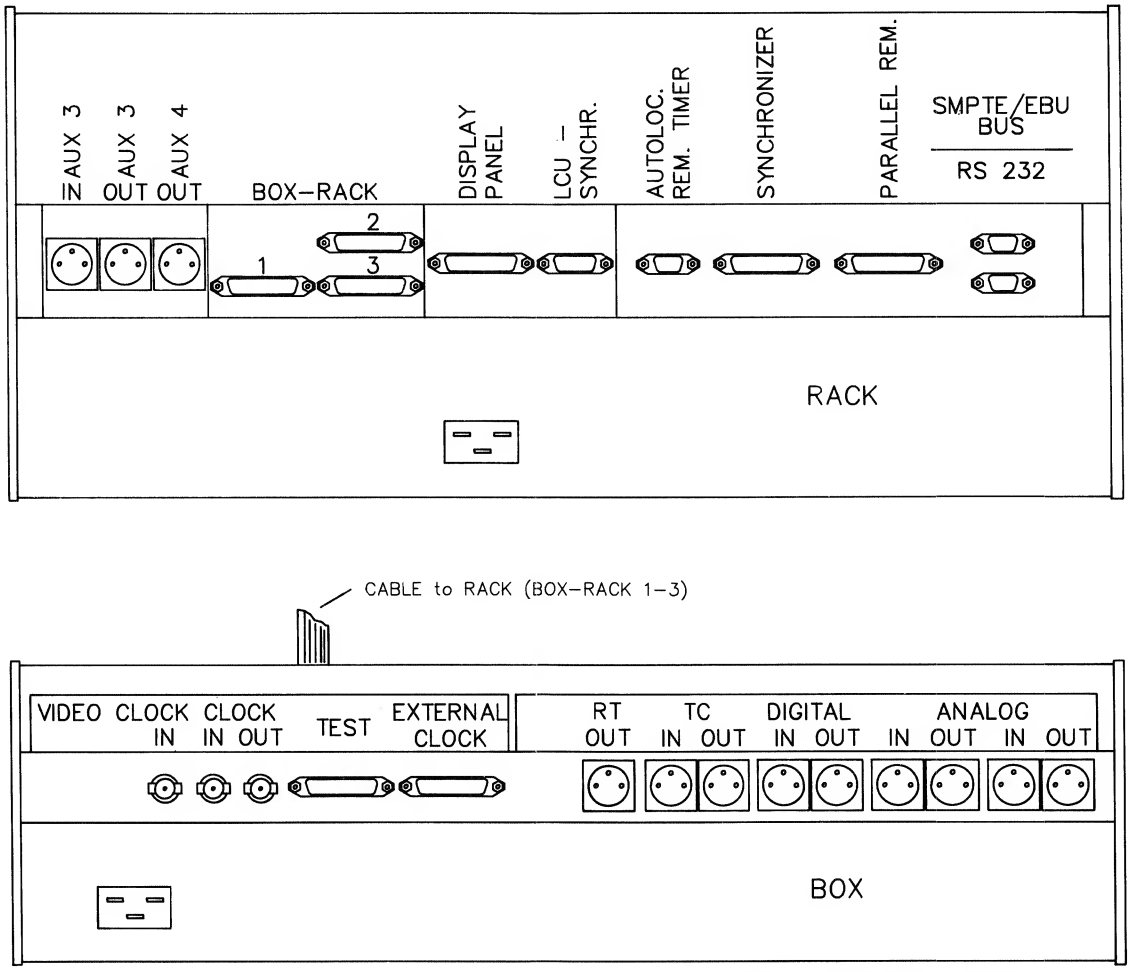

D820X CONNECTOR LOCATION PAGE 3

PUBLISHED: 02/87

D820X: MENU STRUCTURE

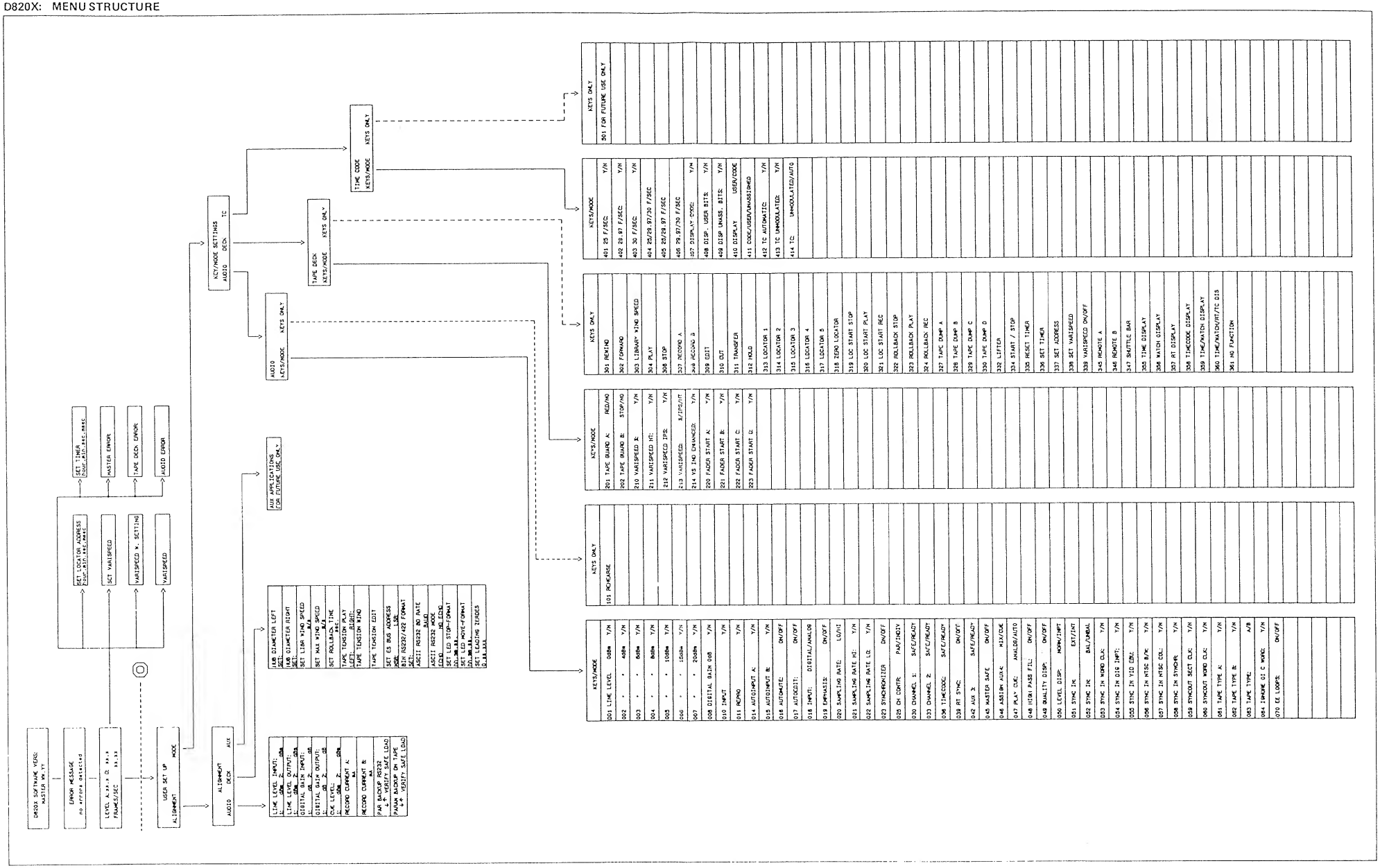

1 Signal Description

(Date of Printout 12.08.86)

Abbreviations	Symbols:
ttl	TTL level
+/-	Differential (symmetrical) signal
Amp	Amplifier
ana	Analog signal
Hd.	Head
423	RS-423-standard signal
Analog In	Analog Input Board
An. Output	Analog Output Board
Gain Cnt	Gains Control Board
Dapro IF	Data Processor Interface Board
Data Proc	Data Processor Board
Coef. Gen.	Coefficient Generator Board
Codec Cnt	Codec Control Board
Codec Mem	Codec Memory Board
X-format.	Transformatter Board
Run Proc.	Run Processor Board
RT/TC Cod	RT/TC Codec Board
Timing+T.	Timing + Test Board
Syscon	System Controller Board
Box Pwr.	Box Power Supply
An. Rout.	Analog Routing Board
PDM Cnt	PDM Control Board
PDM Demod	PDM Demodulator Board
PDM Mod	PDM Modulator Board
Disp. IF	Display Interface Board
Cue PQ	Cue/PQ Delay Board
Signal Q	Signal Quality Board (on transport)
Master IF	Master-Syscon Interface Board
Master	Master MPU Board
Rack Pwr.	Transport Power Supply
PB. Amp.	Playback Amplifier Board
TD. Monit.	Tape Deck Monitor Board
Chan. Cnt	Channel Control Panel (Transceiver)
Disp. Proc	Display Panel (Display Processor)
Mon. Panel	Monitor Panel (Amplifier)

Remarks: Only the non-inverted conductor of differential signals is listed below. The nomenclature for the inverted conductor contains an "I" right before the actual signal name and after the origin prefix (CC, DD, ect.) which may come first.

Signal	lev	Source	Sink	Description
ADBCLKA	+/-	Dapro IF	Analog In	Bit-clock for analog input
ADCCLIP1	ttl	Analog In	Gain Cnt	Clipping level channel 1 analog
ADCCLIP2	ttl	Analog In	Gain Cnt	Clipping level channel 2 analog
ADDAT1	+/-	Analog In	Dapro IF	Data from analog input CH 1
ADDAT2	+/-	Analog In	Dapro IF	Data from Analog Input CH 2
ADSTART	+/-	Dapro IF	Analog In	Start conversion
ADVALID	+/-	Dapro IF	Analog In	Data from analog input valid
ADTO--3	ttl	Run Proc.	X-format.	Data and sync addresses for X-formatter
AESIN	+/-	XLR plug	Gain Cnt	Data from digital input
AESO1	+/-	Dapro IF	XLR plug	Digital output data (aes/ebu)
ANAIN-1	+/-	XLR plug	Analog In	Channel 1 input analog
ANAIN-2	+/-	XLR plug	Analog In	Channel 2 input analog
ANAOUT-1	+/-	An.Output	XLR plug	Channel 1 output analog
ANAOUT-2	+/-	An.Output	XLR plug	Channel 2 output analog
AUX3IN	+/-	XLR plug	Cue P/Q	Aux 3 input (data only)
AUX3OUT	+/-	An. Rout.	XLR plug	Aux 3 output (data or cue right)
AUX4OUT	+/-	An. Rout.	XLR plug	Aux 4 output (mix or cue left)
B	ttl	PDM Mod.	Cue P/Q	Control signal for cue delay
BLSYN	+/-	X-format.	Write Amp	Blocksync for write amplifier
BSYNCOUT	ttl	Gain Cnt	Dapro IF	Blocksync for digital output
CBUSAD	+/-	Syscon	Timing+T. RT/TC Cod Codec Mem Codec Cnt Gain Cnt Analog In An.Output PDM Cnt Disp. IF Detector	Address line syscon bus
CBUSCLK	+/-	Syscon	Timing+T. RT/TC Cod Codec Mem Codec Cnt Gain Cnt Analog In An.Output PDM Cnt Disp. IF Detector	Clock line syscon bus
CBUSDAT	+/-	Syscon	Timing+T. RT/TC Cod Codec Mem Codec Cnt Gain Cnt Analog In An.Output PDM Cnt Disp. IF Detector	Data line syscon bus
CCADDRDE	ttl	Codec Mem	Codec Cnt	Address disable
CCADEC	ttl	Codec Cnt	Codec Mem	Encoder/decoder ram: 0 = encoder
CCAHO--7	ttl	Codec Cnt	Codec Mem	Ram column addresses
CCALO--7	ttl	Codec Cnt	Codec Mem	Ram row addresses
CCBLCRC	ttl	Codec Mem	Codec Cnt	CRC block flag
CCCRC	ttl	Codec Mem	Codec Cnt	CRC error
CCEO	ttl	Codec Mem	Codec Cnt	State of word error counter
CCECD	ttl	Codec Mem	Codec Cnt	Uncorrectable checkline
CCEEO	ttl	Codec Mem	Codec Cnt	Part of syscon control byte
CCEE1	ttl	Codec Mem	Codec Cnt	Part of syscon control byte
CCENCIN	ttl	Codec Mem	Codec Cnt	Encoder input enable
CCE1	ttl	Codec Mem	Codec Cnt	State of word error counter
CCFBCLR	ttl	Codec Mem	Codec Cnt	ALU feedback clear
CCILV	ttl	Codec Mem	Codec Cnt	Data discontinuity in checkline
CCIR5	ttl	Codec Cnt	Codec Mem	Timing signal
CCK5	ttl	Codec Cnt	Codec Mem	Timing signal
CCPR1	ttl	Codec Cnt	Codec Mem	Splice preset flag
CCQECD	ttl	Codec Mem	Codec Cnt	Q-line error correction disable
CCQECDM	ttl	Codec Mem	Codec Cnt	Q-line err corr disable masked
CCRDERR	ttl	Codec Mem	Codec Cnt	Read error simulation (syscon)
CCREPRO	ttl	Codec Mem	Codec Cnt	Block flag write
CCWRERR	ttl	Codec Mem	Codec Cnt	Write error simulation (syscon)
CCO--7	ttl	Codec Cnt	Codec Mem	Program instructions
CHAESB	ttl	Dapro IF	Gain Cnt	Right/left channel digital input
CHASEL1--2	ttl	PDM Cnt	An. Rout.	Channel select for monitoring

Signal	lev	Source	Sink	Description
CLK1	ttl	Timing+T.	Run Proc. X-format.	System clock
CLK2	ttl	Timing+T.		System clock
CLK4	ttl	Timing+T.	X-format. Gain Cnt Coef.Gen. Data Proc Dapro IF	System clock
CLK5	ttl	Timing+T.	X-format. Codec Mem Codec Cnt Coef.Gen. Dapro IF RT/TC Cod	System clock
CLK6	ttl	Timing+T.	Run Proc. X-format. Codec Mem Codec Cnt	System clock
CLK7	ttl	Timing+T.	Codec Mem Codec Cnt	System clock
CLK8	ttl	Timing+T.	Codec Mem Codec Cnt	System clock
CLK9	ttl	Timing+T.	Codec Mem Codec Cnt	System clock
DABCDA1	+/-	Dapro IF	An.Output	Bit-clock for analog output
DACOUT1	ana	An.Output	An. Rout.	Channel 1 monitor input
DACOUT2	ana	An.Output	An. Rout.	Channel 2 monitor input
DADAT11	+/-	Dapro IF	An.Output	Data channel 1
DADAT21	+/-	Dapro IF	An.Output	Data channel 2
DAVAL1A	+/-	Dapro IF	An.Output	Data valid for digital output
DA96FS	+/-	Dapro IF	An.Output	Sampling clock for dig. output
DCDAPDEC	ttl	Codec Mem	Coef.Gen.	Data outpt frm decoder to dapro
DCD1CLK	ttl	Codec Cnt	Codec Mem Coef.Gen.	Data clock normal channel
DCD2CLK	ttl	Codec Cnt	Codec Mem Coef.Gen.	Data clock twin channel
DCENCDAP	ttl	Dapro IF	Codec Mem	Data outpt frm dapro to encoder
DCFMUT	ttl	Codec Cnt	Data Proc	Mute flag : 1 = mute
DCFSPL	ttl	Codec Cnt	Data Proc	Splice flag
DCIDAVAL	ttl	Dapro IF	Codec Mem	Data shift enable (act. low)
DCINIT	ttl	Codec Cnt	Data Proc Gain Cnt	Blocksynchronization codec-dapro
DCINVAL	ttl	Codec Mem	Data Proc	Data error flag : 1 = error
DDATAAES	ttl	Dapro IF	Gain Cnt	Digital input data
DDBCLK	ttl	Dapro IF	Gain Cnt	Clock digital input data
DDBSYNIN	ttl	Dapro IF	Gain Cnt	Blocksync digital input data
DDB1D14	ttl	Coef.Gen.	Data Proc	Bus 1 for crossfilter
DDB2D13-15	ttl	Coef.Gen.	Data Proc	Bus 2 for crossfilter
DDCHPRO	ttl	Data Proc	Coef.Gen. Dapro IF Gain Cnt	Signal processing channel choice 0 = channel 2, 1 = channel 1
DDCHSTAT	ttl	Dapro IF	Gain Cnt	Channel status digital input
DDCK2AES	ttl	Gain Cnt	Dapro IF	Clock-2 digital input
DDCLKG1	ttl	Gain Cnt	Coef.Gen.	Bit-clock for DATAG1
DDCLRO	ttl	Coef.Gen.	Data Proc	ALU overflow flag
DDC3	ttl	Data Proc	Gain Cnt	Clipping active flag
DDDATAG1	ttl	Gain Cnt	Coef.Gen.	Serial gain addresses/data input
DDFADD0--1	ttl	Dapro IF	Gain Cnt	Digital input flag addresses
DDFGAI	ttl	Coef.Gen.	Data Proc	Load gain command for program control
DDGRDY1	ttl	Coef.Gen.	Gain Cnt	Ready to load gain
DDHPOFF	ttl	Gain Cnt	Data Proc	High pass filter on/off : 0 = on
DDIDIGMU	ttl	Gain Cnt	An.Output	Power-up reset
DDIFVAL	ttl	Dapro IF	Gain Cnt	Flag digital input data valid
DDISTART	ttl	Data Proc	Coef.Gen. Dapro IF	Start A/D conversion
DDLCLK1	ttl	Gain Cnt	Coef.Gen.	Shift enable/end of data for DATAG1
DDLCLK10	ttl	Data Proc	Dapro IF Gain Cnt	Repro out to display register
DDLCLK11	ttl	Data Proc	Dapro IF Gain Cnt	Sync out to display register
DDMIEN1	ttl	Coef.Gen.	Data Proc	Multiplier enable
DDMUTE	ttl	Gain Cnt	Data Proc	Overall mute
DDPROA0--9	ttl ttl	Data Proc	Coef.Gen. Gain Cnt	Program counter (D0 = lsb)

Signal	lev	Source	Sink	Description
DDSPOTER	ttl		Coef.Gen.	not used anymore
DD3HEAD	ttl		Coef.Gen.	not used anymore
			Data Proc	
DINT	ttl	Run Proc.	X-format	Input data for transformatter
DTR1--8	+/-	Detector	Run Proc.	Digital track 1 to 8
DPCBAD	+/-	Disp. IF	Chan.Cnt	Sysbus-addresses for Panels
			Disp.Proc	
			Mon.Panel	
DPCBDAT	+/-	Disp. IF	Chan.Cnt	Sysbus-data for Panels
			Disp.Proc	
			Mon.Panel	
DPCBCLK	+/-	Disp. IF	Chan.Cnt	Sysbus-clock for Panels
			Disp.Proc	
			Mon.Panel	
DP0--7	ttl	Cue P/Q	PDM Mod.	Delayed PDM data
DSPA-0--7	ttl	PDM Cnt	Signal Q.	Signal quality channel 1
DSPB-0--7	ttl	PDM Cnt	Signal Q.	Signal quality channel 2
DSSY	ttl	X-format.	RT/TC Cod	Sectorsync for rt
DTR1--8	+/-	Detector	Run Proc.	Digital tracks 1--8
D0--D7	ttl	PDM Cnt	PDM Demod	8-bit bus for level adustments
			An.Rout.	
EEPDM	ttl	PDM Cnt	PDM Demod	PDM E to E loop on/off
ENCDELAY	ttl	PDM Cnt	Cue P/Q	Cue P/Q data delay adjust
FILCLK	ttl	PDM Cnt	PDM Demod	SC-filter bandwith control
FBWS	+/-	X-format.	---	Word sync
FLEM	ttl	Gain Cnt	Analog In	Emphasis flag
			An.Output	
F1--F3	ttl	X-format.	---	Flags to be written on tape
HDTR1--12	ttl	Read Head	Head Amp.	Read head tracks 1--12
HI/LO	ttl	Timing+T.	X-format.	Sampling frequency=32kHz or not
IAN/PDM	ttl	PDM Cnt	PDM Demod	Cue tracks recorded
				0 = analog, 1 = PDM
ICARRY	ttl	Dapro If	Gain Cnt	Blocksync out
ICLK5	ttl	Timing+T.	X-format.	System clock
ICLK6	ttl	Timing+T.	X-format.	System clock
			RT/TC Cod	
ICOUT1WR	ttl	PDM Cnt	An. Rout.	Cue 1 output level
ICOUT2WR	ttl	PDM Cnt	An. Rout.	Cue 2 output level
IERRL	ttl	----	X-format.	X-formatter error flag CRC
IHISPD	ttl	Detector	PB. Amp.	0 = tape speed > 1m/sec
ILOCK	ttl	Dapro IF	Gain Cnt	Locksignal DI-PLL
ILOSPD	ttl	Detector	PB. Amp.	0 = tape speed > 20 cm/sec
IMASSA	ttl	Write Amp	Detector	Master Safe (0 = on)
IPDMMUTE	ttl	PDM Cnt	PDM Demod	Mute PDM
IRECD1--2	ttl	Detector	Write Amp	Write-enable for dig.track 1/2
IREC1--2	ttl	Detector	Write Amp	Write-enable for dig.track 3--10
IREC11--12	ttl	Detector	Write Amp	Write-enable for dig.track 11/12
ISYNC	ttl	Run Proc.	X-format.	Sync for X-formatter input data
ITEST	ttl	----	X-format.	Test signal
IWRET	ttl	Run Proc.	X-format.	X-formatter input data valid
				0 = 2 head
ITRAR	ttl		X-format.	Test signal
ISYRT	ttl	RT/TC Cod	X-format.	RT sync pulse
K-PWRUP	+24	Rack Pwr.	Box Pwr.	Pwr-up voltage for box pwr suppl
K5	ttl	Codec Cnt	Codec Mem	Timing signal
MON/STE	ttl	PDM Cnt	PDM Mod.	PDM track mono/stereo: 0 = mono
			PDM Demod	
			An. Rout.	
			Cue P/Q	
MONTR1	ana	An. Rout.	Mon.Panel	Monitor left signal
MONTR2	ana	An. Rout.	Mon.Panel	Monitor right signal
MON1--5	ttl	TD.Monit.	Detector	Tape deck monitor keys
P-ADDR0--11	ttl	Syscon	----	MPU-addresses
P-DATA0--7	ttl	Syscon	----	MPU-data
P-EN	ttl	Syscon	----	MPU-enable
P-INMI	ttl	Syscon	----	MPU-interrupt masked
P-IN2	ttl	Syscon	----	MPU-interrupt level 2
P-IRES	ttl	Syscon	----	MPU-reset
P-ISEL0--3	ttl	Syscon	----	MPU-select
P-OUT1--2	ttl	Syscon	----	MPU-port output
P-RW	ttl	Syscon	----	MPU-read/write signal

Signal	lev	Source	Sink	Description
PBTR1	+/-	PB. Amp.	RT/TC Cod An.Rout.	Time code playback signal
PBTR2	+/-	PB. Amp.	RT/TC Cod	Reference time playback signal
PBTR3--10	+/-	PB. Amp.	Detector	Digital tracks playback signal
PBTR11	+/-	PB. Amp.	PDM Demod	Cue right playback signal
PBTR12	+/-	PB. Amp.	PDM Demod	Cue left playback signal
PDBCLK	+/-	Dapro IF	PDM Mod.	Bit-clock for PDM modulator
PDCLK3	+/-	Timing+T.	PDM Mod. Cue P/Q	CLK3 for PDM electronics
PDDATA	+/-	Dapro IF	PDM Mod.	PCM data for PDM modulator
PDWCLK	+/-	Dapro IF	PDM Mod.	Word-clock for PDM modulator
PDM-1	ana	PDM Demod	An. Rout.	PDM 1 playback signal
PDM-2/SC	ana	PDM Demod	An. Rout.	PDM 2 playback signal
PDMIOE	ttl	Cue P/Q	PDM Mod.	Ouput enable for PDM data to be delayed
PD0--PD7	ttl	PDM Mod.	Cue P/Q	PDM data to be delayed
PHOSELA	ttl	PDM Cnt	An. Rout.	Phone output : source a
PHOSELB	ttl	PDM Cnt	An. Rout.	Phone output : source b
PWROK	ttl	Box Pwr.	Syscon	Power supply ok signal
PXRT	ttl	X-format.	RT/TC Cod	RT window
RAND	ttl	X-format.	---	Test signal
RDTC	+/-	PB. Amp.	RT Codec	Time Code playback signal
RESHPG1-2		X-format.	RT/TC cod	spare interconnections
RTIN	+/-	XLR plug	RT/TC Cod	Reference time input
RTOUT	+/-	RT/TC Cod	XLR plug	Reference time output
RTSYNC	ttl	RT/TC Cod	Timing+T. X-format.	Servo controlled by RT
RES3	ttl	PDM Cnt	PDM Demod	Spare bit
SAMPCLK	+/-	Timing+T.	Box Pwr.	Power supply clock (fs)
SAMPH/L	ttl	Gain Cnt	Dapro IF	Samp. frequ. 1=44,1/48kHz 0=32kHz
SCLK3	ttl	Timing+T.	Run Proc.	Run Processor clock
SECSYN	ttl	X-format.	RT/TC Cod Gain Cnt	Sector sync pos. edge indicates sector start
SLR	ttl	X-format.	RT/TC Cod	Servo speed control indication
SPEAKMUT	ttl	PDM Cnt	Mon.Panel	Monitor Panel mute signal
SPLINIT	ttl	Gain Cnt	Data Proc Dapro IF	Splice Initialization
SSDACLK	+/-	Master IF	Syscon	SSDA IF. clock
SSDADTR	+/-	Master IF	Syscon	SSDA IF. data transmit ready
SSDACTS	+/-	Syscon	Master	SSDA IF. clear to send
SSDAMRX	+/-	Syscon	Master	SSDA IF. receive data
SSDAMTX	+/-	Master IF	Syscon	SSDA IF. transmit data
SY/WDCKI	423	BNC plug	Timing+T.	Sector/Word clock input
SY/WDCKO	423	Timing+T.	BNC plug	Sector/word clock output
SY/WDIN	+/-	Ext plug	Timing T.	Sector/word clock input
SYWDOUT	+/-	Timing+T.	Ext plug	Sector/word clock output
SYSCFS1--2	ttl	RT/TC Cod	Run Proc.	Sampling frequency
TAPETYPE	ttl	RT/TC Cod	Run Proc.	0 = type B, 1 = type A
TCIN	+/-	XLR plug	RT/TC Cod	Time code input
TCOUT	+/-	RT/TC Cod	XLR plug	Time code output
TCRCERR	ttl	X-format.	Codec Mem	CRC error
TCY-4	ttl	Codec Cnt	X-format.	Carry output reference counter
TD-MVCLK ???	ttl	Ref Clk	PDM Demod	Move pulses
TDECDASY	ttl	X-format.	Codec Mem	Data from X-formatter to decoder
TDSMUTE	ttl	Detector	TD Monit.	Tape deck monitor mute signal
TEST1	ttl	RT/TC Cod	---	Test signal
TFORMENC	ttl	Codec Mem	X-format.	Data from Encoder to X-formatter
TDMPRES	ttl	TD. Monit	Detector	Tape deck monitor present flag
TREFEXT	+/-	Master IF	Timing+T.	External capstan reference
TREFINT	+/-	X-format.	Master If	Internal capstan reference
TPR-1	ttl	Codec Cnt	X-format.	Spare interconnection
TSTSIFRD	ttl	Terminal	Syscon	Terminal interconnection rcv
TSTSIFTD	ttl	Syscon	Terminal	Terminal interconnection xmt
TTIXLOOP	ttl	Timing+T.	X-format. RT/TC Cod	EE loop 2 on
TTRDEMPH	ttl	X-format.	Timing+T.	X-formatter emphasis to syscon
TTREC	ttl	Timing+T.	X-format.	Record signal for X-formatter: nominal servo speed
TTWREMPH	ttl	Timing+T.	X-format.	X-formatter write emphasis
VCLKIN	423	BNC plug	Timing+T.	Video clock input
VIDCLK	+/-	Ext plug	Timing+T.	Video clock input

Signal	lev	Source	Sink	Description
WRCLK4	+/-	X-format.	Write Amp	Clock to read serial data
WRDOUT	+/-	X-format.	Write Amp	PCM serial data to Write Amp.
WRSY0	+/-	X-format	Write Amp	Sync signal to Write Amp.
WRTC ???	+/-	RT Codec	TC Modem	Time Code record signal
WRTR1 ???	+/-	TC Modem	Write Amp	Time Code write signal
WRTR2	+/-	RT/TC Cod	Write Amp	Reference Time write signal
WRTR3--10	+/-	Write Amp	Detector	Digital tracks write signals
WRTR11	+/-	PDM Mod.	Write Amp PDM Demod	Aux track 3 write signal
WRTR12	+/-	PDM Mod.	Write Amp PDM Demod	Aux track 4 write signal
WRTOUT1--12	ttl	Write Hd.		Write head signal
W0--W1	ttl	X-format.	----	Flags to be written on tape
2ECCLK	+/-	Timing+T.	Dapro IF	System clock : T = 128 * fs

2 SYSCON Monitor

The Syscon monitor is part of the Syscon operating system. It is designed to enable a user to control and test programs and hardware for the audio section of the D820X digital tape recorder.
Connect a terminal (supported types below) or a personal computer to the DSub25 connector labeled "Test" at the rear panel of the PCM box. See par. 2.4.1.5 and 2.10.3.A in vol. 1 of the D820X manuals for electrical interfacing. Par. 2.10.5 in the same manual describes the operation of the ASCII interface for the master monitor and is also applicable to the operation of the syscon monitor.
After power-up, the Syscon monitor displays the following message on a properly installed terminal or computer:

```
Welcome to the
D820X SYSCON Operating System
Rel. ww/yy (C)PCM SoftTeam
STUDER AG  CH-8105 Regensdorf

TTY:ESPRIT

>_
```

The message "TTY:ESPRIT" indicates that the system has been installed for an "ESPRIT" terminal. After the logon message, the prompt ">" and and the cursor appears.

Commands:

Command format: >command {arg {arg {.. }}}

The command name is followed by a delimiter of space, comma, or carriage return. If there are no arguments, carriage return terminates the command; otherwise, a space or a comma separates the command from its argument. A space or comma separates arguments from each other. Some short commands (one character commands) require no carriage return and have no arguments.

Entering Commands:

Commands must be entered next to the prompt without a space. Upper or lowercase letters are allowed. The commands can be abbreviated. For example just type in S<CR>, instead of SEND<CR>. The Syscon monitor searches for the first string in the command table which matches the entered string and executes that command.
Misstyped commands can be corrected with "Back Space" and "Del". "ESC" deletes the command line.
The monitor displays an ERROR message when a command can not be found:

```
ERROR: command not found, use HELP
```

By typing the command "HELP<CR>" or just "H<CR>" all commands known to the system are listed. The listing can be interrupted and continued with the space bar or aborted with "ESC".

If the monitor detects a valid command with wrong or misstyped arguments, it displays an ERROR message and the syntax of the command. Then the command line will be displayed again with the cursor at the position of the wrong argument. This allows for quickly correcting arguments:

```
>SEND 71 7G
ERROR: bad data

>SEND 71 7G
             - cursor placed under wrong argument
```

A command is normally terminated if the prompt appears again without a preceeding error message.
Most arguments can be entered just by their first letters. Arguments for addresses or data can be entered in the following forms:

hexadecimal:	1B (default)
decimal:	27.D
binary:	11011.B
label:	CLRSCR (see command ?LABEL)

Detailed Command Description:

General: Arguments in brackets {} are optional. Some commands display the actual status if no argument is given:

Example:
```
>ECHO {Enter}
=ON
>_
```

Arguments can have a set of possible switches or modes separated by slashes "/". Note that only one item can be selected at once.
Text in round brackets () which is only for remarks and the character ">" which indicates the system prompt should not be entered.

Note: Use HELP to list all available commands.

Monitor Command List:

"@" (single stroke command)
Typing @ recalls the last entered command. The command can be executed with "carriage return" or modified as described in "Entering Commands".

"/" (single stroke command)
Displays data of last entered ROM/RAM memory address.

? See command HELP.

?LABEL Displays a list of addresses of constants or subroutines which can be directly accessed by its LABEL.

?TTY Searches through ROM for terminal_drivers. If it has found a driver, it displays the name of the driver on the display. Confirm a driver by entering "y" or let ?TTY search for another driver by typing "n". A few terminal drivers are listed below (see also CTTY).

Preinstalled terminal drivers:

ANSI	standard driver for IBM PC (VT 100) and Atari
ASCII	dummy terminal (no special functions)
ESPRIT	Esprit by Hazeltine or by Esprit model 6110
HP	Hewlett Packard
TVI905	TeleVideo 905

AUTOEDIT {on/off}

AUTOEDIT routes the the digital (main) tracks to the audio monitor in play or record mode; otherwise the audio monitor is connected to the cue tracks.

AUTOINPUT {on/off} {A/B}

In mode A, AUTOINPUT routes all digital channels to input if not in play or record. Otherwise, channels are set according to the channel status. In mode B, AUTOINPUT routes ready channels only to input for the same conditions as in mode A.
{A/B} argument only sets AUTOINPUT mode.

AUTOLEVEL {on/off}

This function is referred to in the menu as LEVELDISP. When on, the level-display is automatically connected to input if the recorder is in stop or record or if the channels are in input mode. In off state the level display is configured to read off-tape signals.

AUTOMUTE {on/off}

AUTOMUTE mutes the cue track line outputs in wind mode only.

BYTE address

Displays in hex the contents of the memory byte specified by address or label. See also MEMORY or WORD.

CALGAIN +/- value(dB) analog/digital{input/sync/repro{left/right}}}

CALGAINS sets the calibrated gains to the following possible values:
digital: - 10 ... + 6 dB
analog: + 0 ... + 20 dB

The optional arguments are used to set specified gains only.

Examples:
>CALGAIN + 2 a r l : sets analog repro gain left to 2 dB.
>CALGAIN - 4 a i : sets both analog input gains to - 4 dB.
>CALGAIN + 0 d r : sets all digital gains right to 0 dB.

CBUS enable/disable/address

The argument "disable" disables access to the control bus for all programs. This is useful to interrupt data transfer on the sysbusbus for test or other purposes.
The argument "addr" enables data transfer to or from only one particular sysbusbus address. Access to all other addresses is disabled.
This command has no effect on the commands SEND and RECEIVE !

Example: >CBUS 70 : disables access to all sysbusbus addresses except address 70

CODEC testmode

This command is used to set the Codec into its various test modes for read/write error simulation and to select the quality display information generated by the Codec.
The Codec test modes are listed in section "D820X: COMMUNICATION BETWEEN SYSCON AND HARDWARE", in section 4 of vol. III of the D820X manuals.

Example: >CODEC 47: simulates read errors (long burst ch2 all tracks)

CTTY type

CTTY is another way to change the terminal driver currently in use. In opposition to ?TTY the name of the terminal driver can be entered directly. The driver will be replaced immediately if the specified driver is available; else, an error message is displayed.

Example: >CTTY ESPRIT: TTY driver will be replaced by ESPRIT terminal

CUEGAIN (dB) {left/right}

CUEGAIN sets the cue output gains in the same way as CALGAIN in the range: 0..20 dBV.7. AUX3 gain is fixed to TTL level when in cue mix mode (see also command CUEMODE).

Example: >CUEGAIN 6 L : sets cue output gain left to 6 dBm

CUEMODE {unmodulated/modulated/auto} {stereo/mix}

arg: {unmod/mod/auto}
selects the appropriate mode for the cue track demodulator (PDM Demodulator). The D820X always writes modulated cue tracks. The arguments are optionally and can be abbreviated (u/mo/a) (s/mi).
arg: {stereo/mix}
selects the cue track configuration either for stereo cueing mode or for mixed cue mode (aux4mix). The two cue tracks are then summed and recorded on auxiliary track 4 (left cue track). In mix mode the auxiliary data channel is assigned to the right cue track.

Example: >CUEMODE u s : selects analog bias playback and stereo cue mode

DISPLAYFORMAT data

This command is used to set the LED display format:

format: bit 7 6 5 4 3 2 1 0

0 0	→ display stop format 1/1000sec
. .	
1 1	1sec
0 0	→ display move format 1/1000sec
. .	
1 1	1sec
0 0	→ leading zero suppr. hh.mm.ss.xxx
. .	
1 1	m.ss.xxx
x x	

Example: >DISPLAYFORMAT 00111000.B : move m.ss.x stop m.ss.xxx

DUMP {addr1} {addr2} {r}

Dumps a block of memory in hex digits and ASCII characters. Press "space bar" to hold/continue dump or "Escape" to abort.
Argument "r" repeats the dump function.

Examples:
>DUMP : dumps all, starting at the last entered address
>DUMP 400 : dumps only one line 400...4F
>DUMP 20 1000 : dumps from address 20 to address 1000

ECHO {on/off}

Echo character entered by keyboard on the screen.

EELOOP {0..5}

EELOOP (electronics to electronics loop) is used to test individual sections of the digital audio path.

Examples:
>EELOOP 0 : no loop → signal off tape
>EELOOP 1 : Write amp/Run Processor loop (Detector) (1+r)
>EELOOP 2 : Transformatter loop (also RT-loop)
>EELOOP 3 : loop after Codec
>EELOOP 4 : input loop, before Codec
>EELOOP 5 : Dapro input loop (ADC to DAC converter)

EMPHASIS {on/off}

EMPHASIS selects record/playback with emphasis (ADC) and deemphasis (DAC). In playback, deemphasis is set according to the emphasis flag encountered on tape, in digital input mode according to the channel status byte.

HELP

Displays the command list with syntax. Press "space bar" to hold/continue listing or "Escape" to abort.

HPFILTER {on/off}

HPFILTER selects the digital highpass filter. It is active in the analog input mode only.

IGNOREDI {on/off}

"Ignore digital input" (control word) is used when the control word of the digital input source is not confirming in its format to the professional AES/EBU standard. The D820X operates with professional AES/EBU control information only, and will display an error message "Illg Dig Inp Format" when in digital input mode with (IGNOREDI = off)in the case of a control word which does not confirm to the professional AES/EBU standard. With (IGNOREDI = on) the D820X neglects incoming digital input control information, thereby enabling the user to select sampling rate and emphasis manually. No error message will be displayed anymore.

Example: >IGNOREDI on : neglects digital input control information

INPSEL {analog/digital}

The command INPSEL controls the input selector. Input to the recorder can be either from ADC (analog) or DI (digital input).

INPUT {1} {2} {tc} {aux}

When INPUT is selected, the line outputs and the digital outputs carry the input signal of a specified channel (channel 1 or 2). If no argument is given, all channels are set to input. See also commands REPRO, AUTOINPUT, and EELOOP.

Example: >INPUT 2 tc : sets channel 2 and timecode to input

MASTERCLOCK {internal/ebu/ntsc{black&white/color}/di/tls/wordclock} {balanced/unbalanced} {outputclock wordclock/sector}

The clock reference for the masterclock can be supplied by the following sources:

internal	: internal crystal
ebu	: external video clock 50 Hz or composite video (unbalanced only)
ntsc black&white	: external video clock 60 Hz or composite video (unbalanced only)
ntsc color	: external video clock 59.94 Hz or composite video (unbalanced only)
di	: digital input (AES/EBU format)
tls	: external synchronizer
wordclock	: external word clock (sampling frequency)

Some clock input circuits accept balanced or unbalanced signals. The argument "balanced/unbalanced" should be added according to the input signal.
There is only one connector for clock output. The argument "outputclock wordcloc/sector" is used to select between word and sector clock as output clock.

Examples: >MASTERCLOCK int out w : selects crystal, outclk = word
>MASTERCLOCK di bal : selects digital input balanced (unbalanced is not possible)

MEMORY {addr}

The command MEMORY displays or changes memory data. If no address is given the last entered address will be used.
Press "space bar" to skip to the next databyte, "\" to skip back to the previous databyte or "carriage return" to finish.

Example: >MEMORY 100
0100: 05
- enter new data here

MONITOR {audio/cue/tc} {input/repro} {mute/demute {1/2}}

The audio monitor can be fed by different signal sources specified with the first two arguments. Both monitor channels can be muted with the additional argument "mute/demute {1/2}".

Example: >MONITOR cue mute 1 : monitoring of cue tracks, ch 1 muted
>MONITOR tc r : monitoring of timecode repro

MR {addr}

Repetitive readout of memory data, specified with {addr}. See also command MEMORY.

PLAY {quit}

The command PLAY configures the electronics for reproduce mode and demutes the digital reproduce channels. PLAY quit terminates playback mode and mutes the digital reproduce channels.

POWER {down}

The command POWER demutes all output channels and the audio monitor. This command is also used to reset Codec Control.
POWER down mutes all output channels and the audio monitor. All write amplifiers will be switched off (for safety) and the checksum of the nonvolatile RAM section will be calculated. Then the System controller shuts down.

QDISPLAY {on/off}

The signal quality display is active only if it is enabled with the command QDISPLAY (default on) and only in play/repro mode.

RAMTEST addr1 addr2 {r}

RAMTEST checks RAM for read/write errors. There are two RAM-sections:

section	address range	
Syscon	0080 ... 07FF	(min 2 k RAM)
user	0800 ... 1FFF	(only if 8 k RAM installed)

The additional argument {r} may be added to repeat ramtest; press "ESC" to abort.

Example: >RAMTEST 80 7FF r repeats syscon RAM test

READY {master} {d {1/2}} {a {1/2/3/4}}

READY with no argument, it sets all channels to ready mode.
READY with the argument {master} disables MASTERSAFE (see also commands SAFE and RECORD).

Example: >READY d1 a1 a2 : sets dig ch1 and aux ch1 + 2 to ready

RECEIVE addr {b}

RECEIVE reads one byte from a sysbus transmitter continously until any key is pressed. "addr" must be an even address, one byte long. The argument {b} can be added to display the received byte in binary format.

Examples:
>RECEIVE 70
C_BUS ADDR: 70 DATA 5A

>RECEIVE 70 b
C_BUS ADDR: 70 DATA 01011010

RECORD {quit} {current {+/- xx}}

RECORD activates record mode. Data of ready channels is written on tape if rehearsal mode is not established.
RECORD quit terminates record mode.
The record current is set with the optional argument "current +/- xx". "xx" must be in the range 0..44.

Example: >RECORD cur + 35 : sets record current to 35.

REHEARSE {on/off}

Activates rehearsal mode. The entire encoding and decoding chain is used and data is routed directly in front of the record drivers to the Run Processor. Due to this measure all functions of the digitalaudio electronics can be simulated (gain adjustments, etc.) and the delays are identical to the off tape mode, except for the head delay which is 152 blocks. The command here affects both channels simultaneously. Only commands from master or from the serial interface are channel selective. If necessary, channel selective commands can be transmitted by using SEND command (see below). The write amplifiers remain in safe mode.

See also commands EELOOP and SAFE.

REPRO {1} {2} {tc} {aux}

Sets the appropriate main channels 1 or 2 or the time code track or auxiliary 3 track to reproduce mode, instead of input mode.

RESET {time/pcm/peak/qcount} {quit}

RESET must always be followed by RESET quit. This combination resets the actual time (when this option is selected) which is displayed in the time displays. In watch mode, reset also clears the signal quality counters. In RT mode, reset is active in record mode only. TC must be reset on the external time code generator. The options peak or qcount reset either the peak level display or the quality counters.

RTSYNC {on/off}

RTSYNC has two different meanings. It is used to protect the RT track from accidental overwriting and controls the TBC (time base corrector) sync mode. If RT Sync is on, the TBC synchronizes to RT sync from tape, else to data block sync. During normal operation RT Sync is necessary when a channel sequential recording is made or played back.

SAFE {master} {d {1/2}} {a {1/2/3/4}}

SAFE with no argument sets all channels in safe status. SAFE with the argument {master} means MASTERSAFE. In this mode, all channels are switched to safe, overriding to ready is not directly possible (see also command READY).

Example: >SAFE d1 d2 a1 : sets dig ch 1 + 2 and aux ch1 to safe

SAMPFREQ {hi/lo/data}

The D820X has a set of two VCXO's[1] which generate the masterclock timing, "hi" selects the higher sampling frequency, "lo" the lower sampling frequency of which the recorder is equipped. With "data" one of four sampling frequencies can be specified even if the recorder is not equipped accordingly:
Fs = 1(48), 2(44.1), 3(32) and 4(44.056) kHz. This is allowed only in external sync mode (see MASTERCLOCK).

Example: >SAMP hi : selects the high sampling rate
>SAMP ext 4 : selects 44.056 kHz = > ext. Sync !

SEND address data {repeat}

It is used to send data bytes to the hardware according to the list "COMMUNICATION BETWEEN SYSCON AND HARDWARE" in section 4 of this manual. Some of these commands may immediately be overwritten by the system controller (i.e. time settings when the recorder is in reproduce mode). Then the argument {r} can be added to repeat the command. "addr" must be an odd address.

SHOW status/gains/quality {codec testmode}/crc 1..8/rt

SHOW displays Syscon variables repetitively. The argument permits a choice of the following options:

status:	errors, parameters, flags
gains:	gain values for cal-, uncal- and headroom gains
quality:	signal quality counters
crc:	CRC errors of single tracks
rt:	control word of reference track (up to 16 bits) and channel status bytes (one each) of digital in- and output (AES/EBU-type).

The option "quality" has an additional argument for Codec test mode (see chapter "COMMUNICATION BETWEEN SYSCON AND HARDWARE" for a detailed description of the Codec test modes in section 4 of this manual).

Examples:

>SHOW s	displays Syscon status
>SHOW q 7F	displays quality counters in Codec repro-loop
>SHOW crc 3	displays CRC errors of track 3

STTY 9600/1200/300

The baudrate of the RS-232 output labeled "Test" can be set to the following standard values:

9600	default setting for terminal emulation
1200	used for cassette tape loading or save (streamer mode)
300	used for modem emulation via telephone line

[1] VCXO: voltage controlled crystal oscillator

SWEEP 0..125(o/oo)

The varispeed deviation is modulated by a software LFO (low frequency oscillator) in the specified range (max +/- 12.5 %), until a key is pressed. The modulation speed is approx. 5 seconds.

TANDEM {on/off}

The functions SAFE, READY, INPUT and REPRO are operated simultaneously for both main channels when activated.

TAPESPEED {data}

Used to simulate tape speed values to check switching behavior of hardware. Data is defined as an integer value from 0...1500. The D820X uses two distinct tape speeds to switch resonators, gains, etc.: 50 cm/sec. and 1 m/sec.

Example: >TAPESPEED 1000 : tape speed 1 m/sec. selected

TASK {stop/run} {task_name}

The software of the D820X Syscon is written in a multitasking environment in order to support debugging operations of software or hardware. Since one or more (usually running) tasks can be stopped, faults can be traced more easily within the system. Below is a brief description of the tasks that can be controlled by means of this command:

SYSCO:	checks system status, timing, battery and controls access to the command processor.
SSDA:	communicates with the master CPU.
LQDSP:	processes data for the level and quality displays.
TMDSP:	processes data for the time displays.
RFTRK:	handles RT data and controls RT Codec.
TCTRK:	handles TC data and controls TC Codec.
AESIF:	handles DI/DO data and controls the digital interface.
DPPAN:	controls the Display panel.
CCPAN:	controls the Channel Control panel.
MCPAN:	controls the Monitor panel.
TDMON:	controls the Tape Deck Monitor unit.

Example:

>TASK STOP RFTRK	: disables execution of the reference track task
>TASK RUN	: enables execution for all tasks
>TASK	: displays status of all tasks

TCDISPLAY time/user/flags

Selects time code display mode. The actual display mode must have been set to time code (see TIMEMODE).

time	: tc time
user	: tc user data bytes
flags	: tc flags (f1, f2, f3, f4)

TCFRAME {25/29/30}

Sets TC delay according to the selected tc frame rate.

Example:

>TCFRAME 29	: sets TC delay to 29.97 frm/sec.
>TCFRAME	: displays the selected TC frame rate.

TCMODE {unmodulated/modulated/auto}

The D820X modulates TC in record mode and sets a flag in the RT control word to indicate that TC is modulated. To be compatible with other tapes where TC has been recorded with the conventional bias method, the D820X reads the flag in the RT control word and configures the TC demodulator circuit to the appropriate mode when in auto mode. This mode can be overwritten manually to <unmod> (unmodulated) or <mod> (modulated). Overriding may be necessary if the information contained in the RT control word does not correspond to the actual recording method (restriping of TC only by a recorder with a different recording method, etc.).

Example:

>TCMODE unmod: discards the TC mod flag in the RT control word and selects unmodulated mode.
>TCMODE: displays the actual mode.

TIMEMODE movetimer/watch/rt/tc

Selects the actual time display mode:
move: tape move counter (tape time from move roller)
watch: relative tape move counter
rt: reference track time
tc: time code (see also TCDISPLAY)

VARISPEED {on/off}

VARISPEED mode is active only if the masterclock is set to internal clock reference (see command MASTERCLOCK).

VARIDEV {+/- 125(o/oo)}

Is used to set the deviation in varispeed mode. The deviation range is +/- 12.5 %. Data for deviation is entered as follows:

varispeed deviation:	data:
- 12.5 %	- 125
0.0 %	+ 0
+ 12.5 %	+ 125

Example: >VARIDEV - 75: sets the varispeed deviation to - 7.5 %

WATCH {run/stop}

Emulates watch control mode. The counting mode can be enabled with command "run" or stopped.

Table of Contents Section 3: Communication Between SYSCON and Hardware

3.1 ELECTRONICS CAGE 1.861.300 2
3.1.1 DETECTOR 1.861.804/1.861.809 2

3.2 DISPLAY PANEL, REMOTE DISPLAY PANEL 1.861.555 6
3.2.1 DISPLAY PROCESSOR 1.861.742 6

3.3 ELECTRONICS BOX 1.861.320.00 9
3.3.1 GAINS CONTROL 1.861.853.00 9
3.3.2 CODEC CONTROL 1.861.857.00 14
3.3.3 TIMING AND TEST 1.861.862.00 16
3.3.4 RT/TC CODEC 1.861.861/761 21
3.3.5 ANALOG INPUT 1.861.752/753 29
3.3.6 ANALOG OUTPUT 1.861.751.00 30

3.4 ELECTRONICS RACK 1.861.310.00 31
3.4.1 PDM CONTROL 1.861.813.00 31

3.5 CHANNEL CONTROL PANEL 1.861.370.00 35

3.6 MONITOR PANEL 1.861.365.00 38

3 Communication Between SYSCON and Hardware

Sn 148903

REV.:	23855	/ENCDELAY ACTIVE LOW
REV.:	12856	/ENCDELAY ACTIVE HIGH /PRESENT BIT DETECTOR /EELOOP1 ACTIVE LOW /VTOPDM, VFROMPDM DELETED /PRESENT BIT PDM CONTROL GETS ADDRESS A0H
REV.:	13856	/TDSMUTE, MPSMUTE ACTIVE LOW
REV.:	14856	/MPSMUTE, PLACED TO BIT 1
REV.:	2857	/MAJOR REVISION (FIFTH): T+T, PDM, CODEC, DAPRO
REV.:	18859	/T+T, SEVERAL ERRORS ACC. TO DS, RT/TC CODEC
REV.:	158511	/RT, TC, EMPH HANDLING DI/DO, GAINS CONTROL: DI/DO, DETECTOR: TC/CUE-BIT, T+T: TTLOCK ETC., FS HANDLING, ERROR TYPES, COSMETICS
REV.:	218511	/DEF DI (UNLOCK), TC DOPFRAME + COLORFLAG, DEF RTSYNC
REV.:	298511	/TC SEQ, TC DISP, TC VALID, DEF VARI, TDPRES
REV.:	248601	/HISPDPDM, BULB COMMANDS CCP, TC DISPLAYS, DEF. /DIEMPH/, DEF. /RECORDXF/, VCXOHI, TERMINAL DISPLAYS
REV.:	068602	/DISPL. TYPES, TC BITS DETECTOR, TCMOD, TCSPEED, MCVASP2, C0...C3
REV.:	288605	/RT SYNC TABLE, DPCLIPP, ADCLIPP, EMPHASIS, CODEC: BYTE 70H AND BURST 4 (221 BLOCKS) AND DEF TRACKLOSS (<=1 TRK), TCMOD
REV.:	238606	/SQ-DISPLAYS (INT2/INT1 EXCHANGED), DESCRIPTION OF CODEC ERROR SIMULATION
REV.:	078610	/TDMON1...5, DESC. TC VALIDITY, PRESENT BIT MONITOR PANEL, TERMINAL DISPLAYS
REV.:	158610	/HISPD, S/R CONCEPT, MVARI
REV.:	058612	/RECCUR, LEVEL DISPLAY MODES, FADER CONCEPT, EMPHASIS, TRANSFER TO CMS
REV.:	088612	/AUXTRKFO (USE OF AUX TRACKS)
REV.:	118612	/CHANGES EMPHASIS AND FADER
REV.:	078701	/VIDEO/FILM-CLOCKS VS. FS
REV.:	138701	/HISPDPDM
REV.:	028702	/FADER START DEF., EMPH IN SINGLE TRK RECORDING, IREC
REV.:	208707	/EE1L/R, ADDR. E FOR REMOTE DP, COMMENTS
REV.:	098709	/ARPOFF, ICLRARP, HOLDARP
REV.:	128801	/NEW DEF FOR MASSA (PWRDET), ADAPT RUN PROCESSOR CONTROL DEFINITION, NEW DEF FOR RECORD CURRENT, /PWRDET/ REPLACES /LOSPD/
REV.:	088803	/NEW DEF. FOR C0...C3, TXTCMOD
REV.:	028805	/ARP FEEZE MODES, RT SEQUENCING, TCDELAY, DIAGNOSTIC SCREENS, C0...C3, INTIALZATION OF WRITE AMPLIFIER
REV.:	078806	/DEF. REHEARSE & EE1, DEF. TCDELAY
REV.:	158806	/TC DELAYS
REV.:	288806	/EMPHASIS HANDLING (PLAY MODE + DI, CONSUMER MODE)
REV.:	218809	/FS SELECTION FOR TC OUTPUT DELAY /FSTC/
REV.:	118810	/DEF. TTLOCK
REV.:	248901	/REVISED DEF. OF RT SYNC, DIAGNOSTIC SCREEN 4 (SH R)
REV.:	148903	/DEF. MASTERING DELAY

ERROR TYPES:	A TEMPORARILY DISPLAYED	(TOGETHER WITH ERROR)
	B WITH ACKNOWLEDGE	(PRESS "STORE")
	C REMAINING MESSAGE	(NEEDS NEW POWER-UP)

WARNING TYPES: NOT IMPLEMENTED.

3.1 ELECTRONICS CAGE 1.861.300

3.1.1 DETECTOR 1.861.804/1.861.809

COBUS: RX, TX (8BTRMEX, 8BRECEX)

THIS BOARD SUPPLIES
- PB AMPLIFIER 1.861.801/1.861.808
- TD MONITOR 1.861.802
- WRITE AMPLIFIER 1.861.803

OVERVIEW OF ALL COMMANDS LISTED IN THIS SECTION:

POS	BITS	COMMAND	DESCRIPTION
1	1	SAFECH1	SAFE TRK 1A,2A,3A,4A ENABLE WITH SAFE/READY
2	1	SAFECH2	SAFE TRK 1B,2B,3B,4B ENABLE WITH SAFE/READY
3	1	SAFEAUX1	SAFE AUX1 (TC) ENABLE WITH SAFE/READY
4	1	SAFEAUX2	SAFE AUX2 (RT) AS POS 1,2 EXCEPTION: SEE $
5	1	SAFEAUX3	SAFE AUX3 (CUE R,EXT), SEE $$
6	1	SAFEAUX4	SAFE AUX4 (CUE L,MIX) SIMILAR TO POS. 1,2
7	1	MASSA	MASTER SAFE, AFFECTS ALL TRACKS, ENABLES K
8	8	RECCUR	RECORD CURRENT, RELATIVE CURRENT
9	1	TDSMUTE	TAPE DECK SPEAKER MUTED
10	2	EE1	EE LOOP 1, WRITE AMPLIFIER TO DETECTOR
11	1	TDMON1	INPUT/TAPE
12	1	TDMON2	TC
13	1	TDMON3	DIGITAL/CUE
14	1	TDMON4	1/MIX
15	1	TDMON5	2/AUX
16	1	PRESENT	DETECTOR PRESENT
17	1	PWRDET	POWER-DOWN/UP K FOR COMPARATORS ON DETECTOR
18	1	HISPD	AUX 1,3,4: REDUCED GAIN (TS >50cm/sec.)
19	1	TDMPRES	TAPE DECK MONITOR PRESENT
20	4	C0...3	RESONATOR SELECTION ACC. TO MOD/UNMOD/HISPD

KEYBOARD TAPE DECK MONITOR:

		INPUT		DIGITAL		
*	*	*	*	*	*	
VOLUME	TAPE	TC	CUE	1/MIX	2/AUX	

NOTES: POS. 1,2 CONTROLLED BY MASTER SAFE, REHEARSE AND SAFE/READY

$ RT W AFTER TIME DELAY IF REC AND NO RT R (MESSAGE TO LCD) POS. 4 CONTROLLED BY MASTER SAFE, REHEARSE, RT SYNC AND SAFE/READY CONFIGURATION.

$$ SIMILAR TO POS. 1,2 IF NO MIX. IF MIX: ACCORDING TO SAFE/READY CONFIGURATION.

TX ONLY (FROM TD MONITOR):

TDMON1...5, PRESENT

BYTE NO	SIG NAME	DESCRIPTION	MSB BITS	7	6	5	4	3	2	1	0
1 (10H)	TDMON1	TAPE, ELSE INPUT		X	X	X	X	X	X	X	0
	TDMON2	TC, ELSE INPUT OR TAPE		X	X	X	X	X	X	0	X
	TDMON3	CUE, ELSE DIGITAL		X	X	X	X	X	0	X	X
	TDMON4	CH1 OR MIX ON, ELSE OFF		X	X	X	X	0	X	X	X
	TDMON5	CH2 OR AUX ON, ELSE OFF		X	X	X	0	X	X	X	X
	PRESENT	DETECTOR PRESENT		0	X	X	X	X	X	X	X
	TDMPRES	TAPE DECK MONITOR PRESENT		X	0	X	X	X	X	X	X

WRITE AMPLIFIER 1.861.803

POS	BITS	COMMAND	DESCRIPTION
1	1	SAFECH1	SAFE TRK 1A,2A,3A,4A ENABLE WITH SAFE/READY
2	1	SAFECH2	SAFE TRK 1B,2B,3B,4B ENABLE WITH SAFE/READY
3	1	SAFEAUX1	SAFE AUX1 (TC) ENABLE WITH SAFE/READY
4	1	SAFEAUX2	SAFE AUX2 (RT) AS POS 1,2 EXCEPTION: SEE $
5	1	SAFEAUX3	SAFE AUX3 (CUE R,EXT), SEE $$
6	1	SAFEAUX4	SAFE AUX4 (CUE L,MIX) SIMILAR TO POS. 1,2
7	1	MASSA	MASTER SAFE, AFFECTS ALL TRACKS, ENABLES K
8	8	RECCUR	RECORD CURRENT

MASSA, SAFEAUX1...4, SAFECH1,2

BYTE NO	SIG NAME	DESCRIPTION	BITS	MSB 7	6	5	4	3	2	1	0
1 (11H)	SAFECH1	SAFE CH 1		X	X	X	X	X	X	X	1
	SAFECH2	SAFE CH 2		X	X	X	X	X	X	1	X
	SAFEAUX1	SAFE AUX 1 (TC)		X	X	X	X	X	1	X	X
	SAFEAUX2	SAFE AUX 2 (RT)		X	X	X	X	1	X	X	X
	SAFEAUX3	SAFE AUX 3 (CUE R, EXT)		X	X	X	1	X	X	X	X
	SAFEAUX4	SAFE AUX 4 (CUE L, MIX)		X	X	1	X	X	X	X	X
	MASSA	MASTER SAFE, ALL TRKS, K ENABLED ($)		X	1	X	X	X	X	X	X

RECCUR

BYTE NO	SIG NAME	DESCRIPTION	BITS	MSB 7	6	5	4	3	2	1	0
2 (13H)	RECCUR	RECORD CURRENT: MIN OFFSET (-44)		0	0	0	0	0	0	0	0
		RECORD CURRENT: NO OFFSET (0)		0	0	1	0	1	1	0	0
		RECORD CURRENT: MAX OFFSET (+88)		1	0	0	0	0	1	0	0

NOTE: DEFINITION OF SAFE/READY CONCEPT SEE PAR. 5.

NOTE $: DEFINITION OF /MASSA/: /MASSA/ IS HI (K ENABLED) IN ALL TAPE DECK MODES EXCEPT RECORD MODE, IF AND ONLY IF THE COMMAND "MASTERSAFE" IS NOT ACTIVATED. OTHERWISE, /MASSA/ IS ALWAYS HI.

NOTE ON INITIALIZATION OF WRITE AMPLIFIER:

SYSCON TRANSMITS DATA BFH AND FFH TO ADDRESS 11H DURING INITIALIZATION (EXACT TIME NOT CRITICAL). WHEN HARDWARE READS BOTH ADDRESSES, THE MASTERSAFE RELAY AND THE WRITE PULSES TO THE HEAD ARE ENABLED IN PRINCIPLE, HOWEVER, DUE TO DATA BFH & FFH, THE WRITE AMPLIFIER IS STILL IN SAFE MODE. FROM THIS MOMENT, BYTE 11H IS UNDER SOFTWARE CONTROL. BEFORE, PROTECTION CIRCUITRY HAS PREVENTED THE HEAD FROM ACCIDENTALLY APPLIED CURRENT WHICH COULD CAUSE DEGRADED DATA DURING POWER-UP. WRITE AMPLIFIERS WITH REVISION LEVEL -21 MAY BE ACTIVE ON CERTAIN TRACKS DURING THE SHORT TIME BEFORE BYTE BFH HAS BEEN TRANSMITTED AND COULD CAUSE DEGRADED DATA AFTER MULTIPLE POWER-UP'S AT THE SAME SPOT ON TAPE.

PB AMPLIFIER 1.861.801/808

POS	BITS	COMMAND	DESCRIPTION
1	1	PWRDET	POWER-DOWN/UP K FOR COMPARATORS ON DETECTOR
2	1	HISPD	AUX 1,3,4: REDUCED GAIN (TS >50cm/sec.)
3	4	C0...3	RESONATOR SELECTION ACC. TO MOD/UNMOD/HISPD

PWRDET, HISPD, C0...3

BYTE NO	SIG NAME	DESCRIPTION	BITS	MSB 7	6	5	4	3	2	1	0
3 (17H)	PWRDET	POWER-DOWN MODE (NOTE $$)		X	X	X	X	X	X	1	X
	HISPD	GAIN ADJUSTED FOR TS >50cm/sec.		X	X	X	X	X	1	X	X
	C0	UNMODULATED, HIGHSPEED (>50cm/sec.)		X	1	1	1	0	X	X	X
	C1	UNMODULATED, LOWSPEED (<=50cm/sec.)		X	1	1	0	1	X	X	X
	C2	MODULATED, HIGHSPEED (>50cm/sec.)		X	1	0	1	1	X	X	X
	C3	MODULATED, LOWSPEED (<=50cm/sec.)		X	0	1	1	1	X	X	X
			C		3	2	1	0			

TABLE FOR C0...C3 AND HISPD:

HISPD	C0	C1	C2	C3	PLAINTEXT
1	0	1	1	1	UNMODULATED, HIGHSPEED
0	1	0	1	1	UNMODULATED, LOWSPEED
1	1	1	0	1	MODULATED, HIGHSPEED
0	1	1	1	0	MODULATED, LOWSPEED

C0, C1, C2, C3: ACTIVE LOW

NOTE $$: POWER-DOWN MODE IF NOT PLAY AND/OR RECORD MODE.

DETECTOR 1.861.804/809

POS	BITS	COMMAND	DESCRIPTION
1	1	EE1L	EE LOOP 1, CH1, LEFT MAIN CHANNEL (S. DEF. BEL.)
2	1	EE1R	EE LOOP 1, CH2, RIGHT MAIN CHANNEL (S. DEF. BEL.)

EE1L, EE1R

BYTE NO	SIG NAME	DESCRIPTION	MSB BITS 7	6	5	4	3	2	1	0
1 (11H)	EE1R	EE LOOP 1 ON, CH 2	0	X	X	X	X	X	X	X
3 (17H)	EE1L	EE LOOP 1 ON, CH 1	0	X	X	X	X	X	X	X

TD MONITOR 1.861.802

POS	BITS	COMMAND	DESCRIPTION
1	1	TDSMUTE	TAPE DECK SPEAKER MUTED, SEE $$$

TDSMUTE

BYTE NO	SIG NAME	DESCRIPTION	MSB BITS 7	6	5	4	3	2	1	0
3 (17H)	TDSMUTE	TAPE DECK SPEAKER MUTED, SEE $$$	X	X	X	X	X	X	X	0

NOTE $$$: MONITOR SPEAKER MUTING MODES:

1 POWER-UP
2 MAINMUTE
3 SPEAKER OFF/ON

FOR DEF. OF MUTING MODES WITH FADER START SEE PAR. 6 MONITOR PANEL
FOR DEF. OF AUTOMUTE, AUTOEDIT, AUTOINPUT SEE PAR. 4.1 PDM CONTROL

DEF. OF REHEARSE, EE2 AND EE1:

1. REHEARSE IS MADE WITH EE4. SINGLE CHANNEL OPERATION POSSIBLE, LOCAL & REMOTE. CONTROLLED BY INPUT/REPRO/SAFE /READY KEYS. DELAYS: 1.5 WORDS INPUT PLUS 6.5 WORDS OUTPUT. AUDIBLE CLICKS MAY OCCUR UNDER EDITOR CONTROL, WHEN PATTERNS DO NOT MATCH (NO CROSSFADE CAPABILITIES IN EE4).
2. EE2: USED FROM REMOTE PORTS. ASCII COMMANDS SRH AND CRH ARE INTERPRETED AS EE2 ENABLE/DISABLE. STEREO OPERATION ONLY! DELAYS:
   INPUT = 5 BLOCKS + 1.5 WORDS + (161.5 BLOCKS AVERAGE ENCODING)
   OUTPUT= 77 BLOCKS + 6.5 WORDS + (161.5 BLOCKS AVERAGE DECODING).
   NO LOCAL OPERATION PROVIDED. RED LED "TEST" ILLUMINATED WHEN EE2 IS ACTIVATED EITHER FROM TERMINAL (SYSCON PORT) OR LOCAL (TEST MENU), OTHERWISE (FROM SERIAL REMOTE PORTS): NOT ILLUMINATED.

3. EE1: TEST LOOP ONLY. LOCAL AND REMOTE CONTROL. ADAPTIVE RUN PROCESSOR IN TRANSPARENT MODE (/ARPOFF/). SINGLE CHANNEL OPERATION POSSIBLE WITH RESTRICTED CAPABILITIES (DANGEROUS!). /RTSYNC/ MANDATORY WHEN OFF-TAPE DATA IS INVOLVED. PRINCIPALLY, TBC CONTROL SIMULTANEOUSLY BOTH FROM TAPE AND DIRECT VIA EE1 IS NOT POSSIBLE. WRITE AND READ BLOCKADDRESSES DO NOT MATCH WHEN EXCESSIVE SPEED DEVIATIONS OCCUR (I.E. DURING START-UP AND STOP). GLOBAL COMMAND EE1 FROM TERMINAL OR MENU AFFECTS BOTH CHANNELS. EE1L AND EE1R ARE NOT ACCESSIBLE TO USERS FROM PERIPHERY. "SEND" COMMANDS TO BYTES 11 AND 17 ARE REQUIRED. RED LED "TEST" ILLUMINATED IF EE1 ACTIVATED FROM PERIPHERY OR LOCAL. MORE INFO: REF. TO /RTSYNC/ AND PAR. "SINGLE CHANNEL RECORDING".

3.2 DISPLAY PANEL, REMOTE DISPLAY PANEL 1.861.555

3.2.1 DISPLAY PROCESSOR 1.861.742

COBUS: RX, TX (8BRECEX, 8BTRMEX)

THIS BOARD SUPPLIES
- KEYBOARD DISPLAY 1.861.741
- DISPLAY IF 1.861.817

OVERVIEW OF ALL COMMANDS LISTED IN THIS SECTION:

POS	BITS	COMMAND	DESCRIPTION
1	8	TIMEINF0	VALUE OF TIMER DISPLAY (PROCESSED, BCD), A
2	8	TIMEINF1	VALUE OF TIMER DISPLAY (PROCESSED, BCD), F
3	8	TIMEINF2	VALUE OF TIMER DISPLAY (PROCESSED, BCD), F
4	8	TIMEINF3	VALUE OF TIMER DISPLAY (PROCESSED, BCD), F
5	8	TIMEINF4	VALUE OF TIMER DISPLAY (PROCESSED, BCD), S
6	8	TIMEINF5	VALUE OF TIMER DISPLAY (PROCESSED, BCD), S
7	8	TIMEINF6	VALUE OF TIMER DISPLAY (PROCESSED, BCD), M
8	8	TIMEINF7	VALUE OF TIMER DISPLAY (PROCESSED, BCD), M
9	8	TIMEINF8	VALUE OF TIMER DISPLAY (PROCESSED, BCD), H
10	8	TIMEINF9	VALUE OF TIMER DISPLAY (PROCESSED, BCD), H
11	8	DPGAINL	GAIN INFO LEFT
12	8	DPGAINR	GAIN INFO RIGHT
13	8	DPLVLCH1	LEVEL DISPLAY CH1
14	8	DPLVLCH2	LEVEL DISPLAY CH2
15	2	DPCLIPP	CLIPPING INFORMATION
16	8	QUALDISL	SIGNAL QUALITY DISPLAY DATA (PROCESSED), LEFT
17	8	QUALDISR	SIGNAL QUALITY DISPLAY DATA (PROCESSED), RIGHT
18	6	BULBSTA1	STATUS DISPLAY PANEL LAMPS
19	6	BULBSTA2	STATUS DISPLAY PANEL LAMPS
20	8	KEYSTAT1	STATUS OF DISPLAY PANEL KEYS
21	6	KEYSTAT2	STATUS OF DISPLAY PANEL KEYS
22	1	PRESENT	DISPLAY PANEL PRESENT

POS 1...10: FORMATTING TIMER INFORMATION:

TIMEINF:	0	9	8	7	6	5	4	3	2	1
INDICATION:	A	I	H1	M2	M1	S2	S1	F3	F2	F1
ADDRESSES:	49	47	45	43	41	39	37	35	33	31

I = SIGN(-)
F = MSEC/FR
A = TIME MODE INDICATOR
(_) TIMER
(I) WATCH (LAP)
(r) RT
(t) TC

TX ONLY:

KEYSTAT1 BYTE NO	SIG NAME	DESCRIPTION	MSB BITS 7	6	5	4	3	2	1	0
1 (6CH)	DPTIME	KEY TIME	X	X	X	X	X	X	X	0
(ECH)	DPWATCH	KEY WATCH	X	X	X	X	X	X	0	X
	DPRESET	KEY RESET	X	X	X	X	X	0	X	X
	DPSTOP	KEY STOP	X	X	X	X	0	X	X	X
	DPHEADR	KEY HEADROOM	X	X	X	0	X	X	X	X
	DPPEAK	KEY PEAK	X	X	0	X	X	X	X	X
	DPCALG	KEY CAL GAINS	X	0	X	X	X	X	X	X
	DPUNCAL	KEY UNCAL GAINS	0	X	X	X	X	X	X	X

KEYSTAT2, PRESENT

BYTE NO	SIG NAME	DESCRIPTION	BITS	MSB 7	6	5	4	3	2	1	0
2 (6AH)	PRESENT	DISPLAY PANEL PRESENT		X	X	X	X	X	X	X	0
(EAH)	DPDIGIT	KEY DIGITAL/ANALOG (ANALOG=1)		X	X	X	X	X	0	X	X
	DPINPUT	KEY INPUT/OUTPUT (OUTPUT=1)		X	X	X	X	0	X	X	X
	DPLEFT	KEY CH 1		X	X	X	0	X	X	X	X
	DPRIGHT	KEY CH 2		X	X	0	X	X	X	X	X
	DPLVLUP	KEY UP		X	0	X	X	X	X	X	X
	DPLVLDWN	KEY DOWN		0	X	X	X	X	X	X	X

NOTE: ADDRESS 6 VALID FOR INTERNAL DISPLAY PANEL, ADDRESS E FOR EXTERNAL DISPLAY PANEL (JUMPER SELECTABLE).

EXTERNAL DP HANDLING: RECEIVE ADDRESSES FOR BOTH PANELS IDENTICAL. THE LAST TX SETTING IS VALID.

RX:

TIMEINF0...9

BYTE NO	SIG NAME	DESCRIPTION	BITS	MSB 7	6	5	4	3	2	1	0
1 (31H)	TIMEINF1	TIMER DIGIT F1		M	B	B	B	B	B	B	L
2 (33H)	TIMEINF2	TIMER DIGIT F2		M	B	B	B	B	B	B	L
3 (35H)	TIMEINF3	TIMER DIGIT F3		M	B	B	B	B	B	B	L
4 (37H)	TIMEINF4	TIMER DIGIT S1		M	B	B	B	B	B	B	L
5 (39H)	TIMEINF5	TIMER DIGIT S2		M	B	B	B	B	B	B	L
6 (41H)	TIMEINF6	TIMER DIGIT M1		M	B	B	B	B	B	B	L
7 (43H)	TIMEINF7	TIMER DIGIT M2		M	B	B	B	B	B	B	L
8 (45H)	TIMEINF8	TIMER DIGIT H1		M	B	B	B	B	B	B	L
9 (47H)	TIMEINF9	TIMER DIGIT I		M	B	B	B	B	B	B	L
10(49H)	TIMEINF0	TIMER DIGIT A		M	B	B	B	B	B	B	L

DPGAINL

BYTE NO	SIG NAME	DESCRIPTION	BITS	MSB 7	6	5	4	3	2	1	0
11(4BH)	DPGAINL	GAIN INFO (ANA./DIGI./HEADROOM) RANGE: ANALOG GAINS=0...200 DIGITAL GAINS=0...160 HEADROOM =0...20	LEFT	M	B	B	B	B	B	B	L

DPGAINR

BYTE NO	SIG NAME	DESCRIPTION	BITS	MSB 7	6	5	4	3	2	1	0
12(4DH)	DPGAINR	GAIN INFO (ANA./DIGI./HEADROOM) RANGE: ANALOG GAINS=0...200 DIGITAL GAINS=0...160 HEADROOM =0...20	RIGHT	M	B	B	B	B	B	B	L

NOTE: DPGAINL AND DPGAINR ARE SELECTED ACCORDING TO BULBSTA. STATUS BYTES:

ANALOG LEVELS: INPUT CH1	INPUT CH2	OUTPUT CH1	OUTPUT CH2
DIGIT. LEVELS: INPUT CH1	INPUT CH2	OUTPUT CH1	OUTPUT CH2
HEADROOM : INPUT CH1	INPUT CH2	OUTPUT CH1	OUTPUT CH2

DPLVLCH1

BYTE NO	SIG NAME	DESCRIPTION	BITS	MSB 7	6	5	4	3	2	1	0
13(61H)	DPLVLCH1	LEVEL DATA CH 1 (BARGRAPH) RANGE: 00...FF		7	6	5	4	3	2	1	0

DPLVLCH2

BYTE NO	SIG NAME	DESCRIPTION	BITS	MSB 7	6	5	4	3	2	1	0
14(63H)	DPLVLCH2	LEVEL DATA CH 2 (BARGRAPH) RANGE: 00...FF		7	6	5	4	3	2	1	0

LEVEL DISPLAY MODES:

A NORMAL: ACCORDING TO INPUT REPRO KEYS ON CCP.

B INPUT : AS AUTOINPUT FOR AUDIO: DISPLAY SET TO INPUT IN STOP MODE.

DPCLIPP1,2

BYTE NO	SIG NAME	DESCRIPTION	BITS	MSB 7	6	5	4	3	2	1	0
15(65H)	DPCLIPP1	CLIPPING INFO CH 1 ON		X	X	X	X	X	X	X	1
	DPCLIPP2	CLIPPING INFO CH 2 ON		X	X	X	X	X	X	1	X

QUALDISL

BYTE NO	SIG NAME	DESCRIPTION	BITS	MSB 7	6	5	4	3	2	1	0
16(67H)	QUALDISL	SIG QUAL CH1 (GRN) QP1 CORRECTION		0	0	0	0	0	0	0	1
		SIG QUAL CH1 (GRN) QP2 CORRECTION		0	0	0	0	0	0	1	0
		SIG QUAL CH1 (GRN) FINGERPRINT		0	0	0	0	0	1	0	0
		SIG QUAL CH1 (GRN) TRACKLOSS		0	0	0	0	1	0	0	0
		SIG QUAL CH1 (YEL) INTERPOLATION 2		0	0	0	1	0	0	0	0
		SIG QUAL CH1 (YEL) INTERPOLATION 1		0	0	1	0	0	0	0	0
		SIG QUAL CH1 (RED) MUTE		0	1	0	0	0	0	0	0
		SIG QUAL CH1 (RED) NO DATA		1	0	0	0	0	0	0	0

QUALDISR

BYTE NO	SIG NAME	DESCRIPTION	BITS	MSB 7	6	5	4	3	2	1	0
17(69H)	QUALDISR	SIG QUAL CH2 (GRN) QP1 CORRECTION		0	0	0	0	0	0	0	1
		SIG QUAL CH2 (GRN) QP2 CORRECTION		0	0	0	0	0	0	1	0
		SIG QUAL CH2 (GRN) FINGERPRINT		0	0	0	0	0	1	0	0
		SIG QUAL CH2 (GRN) TRACKLOSS		0	0	0	0	1	0	0	0
		SIG QUAL CH2 (YEL) INTERPOLATION 2		0	0	0	1	0	0	0	0
		SIG QUAL CH2 (YEL) INTERPOLATION 1		0	0	1	0	0	0	0	0
		SIG QUAL CH2 (RED) MUTE		0	1	0	0	0	0	0	0
		SIG QUAL CH2 (RED) NO DATA		1	0	0	0	0	0	0	0

	QUALDISL (67H)								QUALDISR (69H)							
ADDR. :	80	40	20	10	08	04	02	01	01	02	04	08	10	20	40	80

NOTE: FOR THE COMPOSITION OF SQ-DATA SEE PAR. 3.2, CODEC CONTROL.

BULBSTA1

BYTE NO	SIG NAME	DESCRIPTION	BITS	7	6	5	4	3	2	1	0
18(6BH)	TIME	BULB TIME ON		X	X	X	X	X	X	X	1
	WATCH	BULB WATCH ON		X	X	X	X	X	X	1	X
	HEADROOM	BULB HEADROOM ON		X	X	X	1	X	X	X	X
	PEAK	BULB PEAK ON		X	X	1	X	X	X	X	X
	CALG	BULB CAL GAINS ON		X	1	X	X	X	X	X	X
	UNCALG	BULB UNCAL GAINS ON		1	X	X	X	X	X	X	X

BULBSTA2

BYTE NO	SIG NAME	DESCRIPTION	BITS	7	6	5	4	3	2	1	0
19(6DH)	ANALOG	BULB ANALOG ON		X	X	X	X	X	1	X	X
	OUTPUT	BULB OUTPUT ON		X	X	X	X	1	X	X	X
	CH1	BULB CH1 ON		X	X	X	1	X	X	X	X
	CH2	BULB CH2 ON		X	X	1	X	X	X	X	X
	DIGITAL	BULB DIGITAL ON		X	1	X	X	X	X	X	X
	INPUT	BULB INPUT ON		1	X	X	X	X	X	X	X

3.3
ELECTRONICS BOX 1.861.320.00

3.3.1
GAINS CONTROL 1.861.853.00

COBUS: RX, TX (8BRECEX, 8BTRMEX)

THIS BOARD SUPPLIES

-	DAPRO-IF	1.861.854.00
-	DATA PROCESSOR	1.861.855.00
-	COEFFICIENT GENERATOR	1.861.856.00
-	ANALOG OUTPUT	1.861.751.00
-	ANALOG INPUT	1.861.752.00

OVERVIEW OF ALL COMMANDS LISTED IN THIS SECTION:

POS	BITS	COMMAND	DESCRIPTION
1	5	DPGNADRD	DIGITAL GAIN ADDRESS (MAY BE REDUCED TO 3BITS)
2	8	DPDIGGN	DIGITAL GAIN (VALUE)
3	1	MAINMUTE	HARD OUTPUT MUTE, TO ANA IN- AND OUTPUT
4	1	REPMUTE1	REPRO OUTPUT MUTE (SOFT), CH 1
5	1	REPMUTE2	REPRO OUTPUT MUTE (SOFT), CH 2
6	1	HPFILOFF	SELECT HIGH PASS ON/OFF
7	1	EELOOP5	EE LOOP 5, BEFORE DAPRO
8	1	ADCAES	SELECT INPUT FROM ADC OR DIGITAL INPUT
9	1	PREVIEW	SELECT PREVIEW DELAY/NORMAL (NORMAL OUTPUT)
10	1	EMPHASIS	EMPHASIS ON/OFF, TO ANA IN- AND OUTPUT AND DO
11	1	DISREP1	DISPLAY SELECT (1=REPRO, 0=INPUT), CH 1
12	1	DISREP2	DISPLAY SELECT (1=REPRO, 0=INPUT), CH 2
13	2	DPCLIPP	DIGITAL CLIPPING INFORMATION
14	8	DPLVLCH1	LEVEL DISPLAY CH1
15	8	DPLVLCH2	LEVEL DISPLAY CH2
16	1	PRESENT	GAINS CONTROL PRESENT
17	2	PUNCH	PUNCH FADER (TOGGLE FUNCTION), CH1/2 (NOTE #)
18	8	QUALITY	SIGNAL QUALITY INFO (INT1/2, MUTE, SPLICE)
19	8	DIEMPH	AES/EBU BYTE 00 TO SYSCON, DIGITAL INPUT
20	8	DDEMPH	AES/EBU BYTE 00 FROM SYSCON, DIGITAL OUTPUT
21	1	DAPROSYN	SYNC FOR DAPRO IF AND DATA PROCESSOR
22	1	AESPLL	DIGITAL INPUT PLL LOCK/UNLOCK
23	1	TSHI/LO	TAPE SPEED (LO=32kHz) TO AES PLL
24	2	ADCLIPP	CLIPPING INFORMATION ANALOG INPUT
25	1	INSERT	ANALOG MASTERING: DELAY INSERTION

COMMAND SEQUENCING:

- GAIN: FIRST 2 BYTES: AAAA SSSI GGGGGGGG
  SECOND 2 BYTES: AAAA TTTI DDDDDDDD
  A = DEVICE ADDRESS (ALWAYS 5H)
  S = SUBDEVICE ADDRESS
  I = LO, IF TX (RELATED TO HARDWARE)
  G = GAIN ADDRESS, ADDRESSES GAIN BLOCK (00H, 01H, 02H, 10H, 11H, 12H), DPGNADRD
  T = (SUBDEVICE ADDRESS + 1)
  D = LEVEL DATA, RANGE 40...255), DPDIGGN

EXAMPLE:

FIRST 2 BYTES:	57H	00H
SECOND 2 BYTES:	59H	DFH

NOTE: DIGITAL REPRO CH1 OR CH2 (02H, 12H) AND DIGITAL SYNC CH1 OR CH2 (01H, 11H) TO BE ADDRESSED SIMULTANEOUSLY IN ORDER TO ADJUST DIGITAL OUTPUT GAINS.

NOTE: POS. 14 DISREP1/2: DEPENDING ON PLAY STATUS. THEN TO REPRO, ELSE INPUT.

NOTE: COMMANDS /SPOTERAS/, /3HEAD/ ARE HARDWIRED IN D820X. /3HEAD/ IS IMPLEMENTED.

NOTE #: /PUNCH/ IS STILL HARDWIRED BUT NOT USED IN D820X.

TX ONLY:

DPLVLCH1

BYTE NO	SIG NAME	DESCRIPTION	BITS	MSB 7	6	5	4	3	2	1	0
1 (50H)	DPLVLCH1	LEVEL DATA CH 1 (BARGRAPH)		7	6	5	4	3	2	1	0

DPLVLCH2

BYTE NO	SIG NAME	DESCRIPTION	BITS	MSB 7	6	5	4	3	2	1	0
2 (52H)	DPLVLCH2	LEVEL DATA CH 2 (BARGRAPH)		7	6	5	4	3	2	1	0

DPCLIPP, PRESENT

BYTE NO	SIG NAME	DESCRIPTION	BITS	MSB 7	6	5	4	3	2	1	0
3 (54H)	DPCLIPP1	CLIPPING INFO CH 1 ON (DIGITAL)		X	X	X	X	X	X	X	1
	DPCLIPP2	CLIPPING INFO CH 2 ON (DIGITAL)		X	X	X	X	X	X	1	X
	AESPLL	AES PLL UNLOCK		X	X	X	X	1	X	X	X
	PRESENT	GAINS CONTROL PRESENT		X	X	X	X	X	0	X	X

QUALITY

BYTE NO	SIG NAME	DESCRIPTION	BITS	MSB 7	6	5	4	3	2	1	0
4 (56H)	QUALITY	MUTING ON CH 1		X	X	X	X	X	1	X	X
		SPLICE ON CH 1		X	X	X	X	1	X	X	X
		INTERPOLATION 2ND GRADE CH 1		X	X	X	X	X	X	X	1
		INTERPOLATION 1ST GRADE CH 1		X	X	X	X	X	X	1	X
		MUTING ON CH 2		X	1	X	X	X	X	X	X
		SPLICE ON CH 2		1	X	X	X	X	X	X	X
		INTERPOLATION 2ND GRADE CH 2		X	X	X	1	X	X	X	X
		INTERPOLATION 1ST GRADE CH 2		X	X	1	X	X	X	X	X

NOTE: /SPLICE/ IS NOT SHOWN ON THE SIGNAL QUALITY DISPLAY. TO BE DISPLAYED ON THE TERMINAL ONLY.

DIEMPH

BYTE NO	SIG NAME	DESCRIPTION	BITS	MSB 0	1	2	3	4	5	6	7
5 (58H)	DIEMPH	AUDIO CHANNEL STATUS BYTE 00		0	1	2	3	4	5	6	7

BYTE 00:
BIT 00 : 0 = CONSUMER / 1 = PROFESSIONAL USE
BIT 01 : 0 = NORMAL / 1 = NON-AUDIO
BITS 234 : EMPH., DEFINED IN PAR. 3.3, EMPH. HANDLING
BIT 05 : 0 = SOURCE FS LOCKED / 1 = SOURCE FS UNLOCKED
BITS 67 : FS, DEFINED IN PAR. 3.4, FS HANDLING

NOTE: BIT 0: IF SET LO (CONSUMER): NEGLECT FURTHER INFO.
BIT 1: NOT CONSIDERED IN D820X.
BIT 5: IF SET HI: SEND /MAINMUTE/ TO PROTECT ANALOG OUTPUTS AND DISPLAY ERROR MESSAGE TYPE A, LED "ERROR" FLASHING, LED "EXT. SYNC" DARK, MESSAGE "DI UNLOCK".

ADCLIPP

BYTE NO	SIG NAME	DESCRIPTION	BITS	MSB 7	6	5	4	3	2	1	0
6 (5AH)	ADCLIPP1	CLIPPING INFO ANALOG INPT CH 1 ON		X	X	X	X	X	X	X	1
	ADCLIPP2	CLIPPING INFO ANALOG INPT CH 2 ON		X	X	X	X	X	X	1	X

RX:

DDEMPH

BYTE NO	SIG NAME	DESCRIPTION	BITS	MSB 7	6	5	4	3	2	1	0
1 (51H)	DDEMPH	AUDIO CHANNEL STATUS BYTE 00		0	1	2	3	4	5	6	7

BYTE 00:
BIT 00 : SET HI (PROFESSIONAL USE)
BIT 01 : SET LO (NORMAL AUDIO MODE)
BITS 234: SET AS DEFINED IN PAR. 3.3, EMPH. HANDLING
BIT 05 : SET ACCORDING TO /TTLOCK/ OR VARISPEED, LO = SOURCE SAMPLING FREQUENCY LOCKED
BITS 67 : SET AS DEFINED IN PAR. 3.4, FS HANDLING

NOTE: V = AUDIO SAMPLE VALIDITY SET LO IN TRANSMITTER (VALID)
U = USER DATA BIT SET LO IN TRANSMITTER (DEFAULT)

PREVIEW,ADCAES,EELOOP5,HPFILOFF,REPMUTE1,REPMUTE2,MAINMUTE,DAPROSYN

BYTE NO	SIG NAME	DESCRIPTION	BITS	7	6	5	4	3	2	1	0
2 (53H)	PREVIEW	NORMAL OUTPUT DELAYED		1	X	X	X	X	X	X	X
	ADCAES	DIGITAL INPUT (AS DEF IN T+T, 85H)		X	1	X	X	X	X	X	X
	EELOOP5	EE LOOP 5 OFF		X	X	1	X	X	X	X	X
	HPFILOFF	HIGHPASS FILTER OFF		X	X	X	1	X	X	X	X
	REPMUTE2	REPRO OUTPUT MUTED, CH 2		X	X	X	X	1	X	X	X
	REPMUTE1	REPRO OUTPUT MUTED, CH 1		X	X	X	X	X	1	X	X
	MAINMUTE	ALL OUTPUTS ON		X	X	X	X	X	X	1	X
	DAPROSYN	SYNC MODE FOR DAPRO IF + PROC ON		X	X	X	X	X	X	X	0

NOTE: DAPROSYN EXECUTES ON RISING EDGE.

NOTE: FOR A DEFINITION OF /ADCAES/ SEE NOTE AFTER BYTE 3 (85H) IN PAR. 3.3.

DISREPRO, EMPHASIS, PUNCH, TSHI/LO, INSERT

BYTE NO	SIG NAME	DESCRIPTION	BITS	7	6	5	4	3	2	1	0
3 (55H)	DISREP1	DISPLAY TO REPRO CH 1, ELSE INPUT		X	X	X	1	X	X	X	X
	DISREP2	DISPLAY TO REPRO CH 2, ELSE INPUT		X	X	1	X	X	X	X	X
	EMPHASIS	EMPHASIS FOR AI, AO ON, ELSE OFF		X	X	X	X	X	1	X	X
	PUNCH	FADER CH1 TO INPUT		X	X	X	X	X	X	1	X
	PUNCH	FADER CH2 TO INPUT		X	X	X	X	X	X	X	1
	TSHI/LO	TAPE SPEED HI (48, 44.1, 44.1/1.001)		X	1	X	X	X	X	X	X
	INSERT	MASTERING MODE ON, ELSE OFF		0	X	X	X	X	X	X	X

NOTE: /PUNCH/ NOT USED ANYMORE IN D820X.

COMMAND /INSERT/: MENU STRUCTURE IN "KEY MODE SETTINGS AUDIO / KEYS/MODE":

064 IGNORE DI C WORD Y/N
065 MASTERING ON Y/N
070 TEST ON/OFF

SEND COMMAND /INSERT/, DO NOT INDICATE "EXTERNAL SYNC MODE"

DPGNADRD

BYTE NO	SIG NAME	DESCRIPTION	BITS	7	6	5	4	3	2	1	0
5 (57H)	DPGNADRD	DAPRO GAIN ADDRESS(BIT4=MSB)SEE LIST		X	X	X	M	B	B	B	L

DPDIGGN

BYTE NO	SIG NAME	DESCRIPTION	BITS	7	6	5	4	3	2	1	0
6 (59H)	DPDIGGN	DAPRO GAIN DATA (BIT7=MSB)		M	B	B	B	B	B	B	L

ANALOG INPUT 1.861.752.00
ANALOG OUTPUT 1.861.751.00

MAINMUTE, EMPHASIS

BYTE NO	SIG NAME	DESCRIPTION	MSB BITS 7	6	5	4	3	2	1	0
2 (53H)	MAINMUTE	ALL OUTPUTS ON	X	X	X	X	X	X	1	X
3 (55H)	EMPHASIS	EMPHASIS ON	X	X	X	X	X	1	X	X

PUNCH-XFADE TIME DATA (HEX)	ACTUAL TIME @44.1 msec.	ACTUAL TIME @48kHz msec.
0	ca. 0	ca. 0
1	1	1
2	2	2
3	3	3
4	4	4
5	5	5
6	6	6
7	7	7
8	8	8
9	9	9
A	10	10
B	11	11
C	12	12
D	13	13
E	14	14
F	15	15
10	16	16
11	17	17
12	18	18
13	19	19
14	20	20
15	21	21
16	22	22
17	23	23
18	24	24
19	25	25
1A	26	26
1B	27	27
1C	28	28
1D	29	29
1E	30	30
1F	31	31
20	32	32
21	33	33
22	34	34
23	35	36
24	37	38
25	39	40
26	41	43
27	44	46
28	47	49
29	50	53
2A	53	57
2B	57	62
2C	62	68
2D	68	76
2E	74	85
2F	83	98
30	93	114
31	106	137
32	124	171
33	149	228
34	186	341
35	248	683
36	372	inf.
37	743	n.u.
38	inf.	n.u.
39	n.u.	n.u.
3A	n.u.	n.u.
3B	n.u.	n.u.
3C	n.u.	n.u.
3D	n.u.	n.u.
3E	n.u.	n.u.
3F	n.u.	n.u.

GAIN ADDRESS (HEX)	SELECTED LOCATION
0	INPUT CH 1
1	SYNC CH 2
2	REPRO CH 2
3	DO NOT CHANGE
4	DO NOT CHANGE
5	DO NOT CHANGE
6	DO NOT CHANGE
7	DO NOT CHANGE
8	DO NOT CHANGE
9	DO NOT CHANGE
A	DO NOT CHANGE
B	DO NOT CHANGE
C	DO NOT CHANGE
D	DO NOT CHANGE
E	DO NOT CHANGE
F	DO NOT CHANGE
10	INPUT CH 2
11	SYNC CH 1
12	REPRO CH 1
13	DO NOT CHANGE
14	DO NOT CHANGE
15	DO NOT CHANGE
16	DO NOT CHANGE
17	DO NOT CHANGE
18	DO NOT CHANGE
19	DO NOT CHANGE
1A	DO NOT CHANGE
1B	DO NOT CHANGE
1C	DO NOT CHANGE
1D	DO NOT CHANGE
1E	DO NOT CHANGE
1F	DO NOT CHANGE

3.3.2
CODEC CONTROL 1.861.857.00

COBUS: RX, TX (2BRECTRMEX)

ADDRESSES: TX = 70H, RX = 71H

THIS BOARD SUPPLIES - CODEC MEMORY 1.861.858.00

RX:

HEX	7	6	5	4	3	2	1	0	
88	1	X	X	X	1	X	X	X	SYSCON REQUIRES SQ-DISP. DATA ($)
F7	1	1	1	1	0	1	1	1	SYSCON REQUIRES CRC FROM TRK8 ($$)
F6	1	1	1	1	0	1	1	0	SYSCON REQUIRES CRC FROM TRK7 ($$)
F5	1	1	1	1	0	1	0	1	SYSCON REQUIRES CRC FROM TRK6 ($$)
F4	1	1	1	1	0	1	0	0	SYSCON REQUIRES CRC FROM TRK5 ($$)
F3	1	1	1	1	0	0	1	1	SYSCON REQUIRES CRC FROM TRK4 ($$)
F2	1	1	1	1	0	0	1	0	SYSCON REQUIRES CRC FROM TRK3 ($$)
F1	1	1	1	1	0	0	0	1	SYSCON REQUIRES CRC FROM TRK2 ($$)
F0	1	1	1	1	0	0	0	0	SYSCON REQUIRES CRC FROM TRK1 ($$)
BX	1	X	1	1	X	X	X	X	REPRO CH2 + CH1
AX	1	X	1	0	X	X	X	X	REPRO CH2, INPUT CH1
9X	1	X	0	1	X	X	X	X	REPRO CH1, INPUT CH2
8X	1	X	0	0	X	X	X	X	INPUT CH2 + CH1
7X	0	1	1	1	X	X	X	X	EELOOP 3, NO ERROR
6X	0	1	1	0	X	X	X	X	- - -
5X	0	1	0	1	X	X	X	X	EELOOP 3, WRITE ERRORS
									WRITE ERRORS (5E...50):
5E	0	1	0	1	1	1	1	0	LONG BURST, MOST TRKS,SPLICE,L
5D	0	1	0	1	1	1	0	1	LONG BURST, MOST TRKS,SPLICE,R
5C	0	1	0	1	1	1	0	0	LONG BURST, MOST TRKS,SPLICE,R,L
5A	0	1	0	1	1	0	1	0	SHORT BURST,MOST TRKS,SPLICE,L
59	0	1	0	1	1	0	0	1	SHORT BURST,MOST TRKS,SPLICE,R
58	0	1	0	1	1	0	0	0	SHORT BURST,MOST TRKS,SPLICE,R,L
56	0	1	0	1	0	1	1	0	LONG BURST,SINGLE TRK,TL WRI,L
55	0	1	0	1	0	1	0	1	LONG BURST,SINGLE TRK,TL WRI,R
54	0	1	0	1	0	1	0	0	LONG BURST,SINGLE TRK,TL WRI,R,L
52	0	1	0	1	0	0	1	0	SHORT BURST,SINGLE TRK,P1 COR,L
51	0	1	0	1	0	0	0	1	SHORT BURST,SINGLE TRK,P1 COR,R
50	0	1	0	1	0	0	0	0	SHORT BURST,SINGLE TRK,P1 COR,R,L
4X	0	1	0	0	X	X	X	X	EELOOP 3, READ ERRORS
									READ ERRORS (4F...40):
4F	0	1	0	0	1	1	1	1	BURST 4, R, L, ALL TRACKS
4E	0	1	0	0	1	1	1	0	BURST 3, R, L, ALL TRACKS
4D	0	1	0	0	1	1	0	1	BURST 4, R, L, UPPER HALF OF TRKS
4C	0	1	0	0	1	1	0	0	BURST 3, R, L, UPPER HALF OF TRKS
4B	0	1	0	0	1	0	1	1	- - -
4A	0	1	0	0	1	0	1	0	TRACKLOSS 3, L
49	0	1	0	0	1	0	0	1	TRACKLOSS 2, L
48	0	1	0	0	1	0	0	0	TRACKLOSS 1, L
47	0	1	0	0	0	1	1	1	BURST 2, R, L, ALL TRACKS
46	0	1	0	0	0	1	1	0	BURST 1, R, L, ALL TRACKS
45	0	1	0	0	0	1	0	1	BURST 2, R, L, UPPER HALF OF TRKS
44	0	1	0	0	0	1	0	0	BURST 1, R, L, UPPER HALF OF TRKS
43	0	1	0	0	0	0	1	1	- - -
42	0	1	0	0	0	0	1	0	TRACKLOSS 3, R
41	0	1	0	0	0	0	0	1	TRACKLOSS 2, R
40	0	1	0	0	0	0	0	0	TRACKLOSS 1, R

WRITE ERRORS:			READ ERRORS:		
50 R L)	OVERWRITE DROPOUT:		40 R		trackloss 1
51 R)	single track, short		41 R		trackloss 2
52 L)	burst, second pass		42 R		trackloss 3
	q correction		43 R		(muting)
54 R L)			44 R L		burst 1,upper half of tracks
55 R)			45 R L		burst 2,upper half of tracks
56 L)			46 R L		burst 1, all tracks
			47 R L		burst 2, all tracks
58 R L)	SINGLE SPLICE		48 L		trackloss 1
59 R)	most tracks, short		49 L		trackloss 2
5A L)	burst		4A L		trackloss 3
			4B L		(muting)
5C R L)	DOUBLE SPLICE WITH		4C R L		burst 3,upper half of tracks
5D R)	SHORTEST DISTANCE		4D R L		
5E L)	(221 BLOCKS), most		4E R L		burst 3, all tracks
	tracks, long burst		4F R L		

ABBREVIATIONS:

R = RIGHT CHANNEL (CH 2)
L = LEFT CHANNEL (CH 1)
TL = TRACKLOSS
P1 = FIRST PASS P CORRECTION
COR = CORRECTION
TRK(S) = TRACK(S)

NOTES: ($) TERMINAL (COUNTER) DISPLAY DISABLED. SQ-DISPLAY ONLY.
($$) TERMINAL (COUNTER) DISPLAY ONLY. SQ-DISPLAY DISABLED.

DESCRIPTION OF:

TRACKLOSS 1: 1 TRACK MISSING
TRACKLOSS 2: 2 TRACKS MISSING, CAUSES INT2 (NOTE $)
TRACKLOSS 3: 3 TRACKS MISSING, CAUSES INT1 (NOTE $$)

BURST 1, UPPER HALF OF TACKS: 85 BLOCKS
BURST 2, UPPER HALF OF TACKS: 204 BLOCKS
BURST 3, UPPER HALF OF TACKS: 272 BLOCKS

BURST 1, ALL TRACKS: 85 BLOCKS (FINGERPRINT)
BURST 2, ALL TRACKS: 204 BLOCKS (MAX. FINGERPRINT)
BURST 3, ALL TRACKS: 272 BLOCKS (MUTE)

SHORT BURST: 4 BLOCKS
LONG BURST : 221 BLOCKS

NOTE $: DUE TO THE TWIN MATRICING 1 SAMPLE OUT OF 4 IS MISSING
NOTE $$: DUE TO THE TWIN MATRICING 2 SAMPLES OUT OF 4 ARE MISSING

TX (RX BIT 7 AND BIT 3 SET HIGH)

SYSCON REQUIRES SQ-DISPLAY DATA

BYTE NO	SIG NAME	DESCRIPTION	BITS	7	6	5	4	3	2	1	0
1 (70H)	QP1LEFT	QP1 CORRECTION, CH1		X	X	X	X	X	X	X	0
	QP2LEFT	QP2 CORRECTION, CH1, SQ-DISPLAY		X	X	X	X	X	X	0	X
	FPLEFT	FINGERPRINT, CH1, SQ-DISPLAY		X	X	X	X	X	0	X	X
	TLLEFT	TRACKLOSS, CH1, SQ-DISPLAY		X	X	X	X	1	X	X	X
	QP1RIGHT	QP1 CORRECTION, CH2		X	X	X	0	X	X	X	X
	QP2RIGHT	QP2 CORRECTION, CH2, SQ-DISPLAY		X	X	0	X	X	X	X	X
	FPRIGHT	FINGERPRINT, CH2, SQ-DISPLAY		X	0	X	X	X	X	X	X
	TLRIGHT	TRACKLOSS, CH2, SQ-DISPLAY		1	X	X	X	X	X	X	X

TX (RX BIT 7 SET HIGH, BIT 3 SET LOW)

SYSCON RQUIRES CRC ERRORS (SPECIFY TRK)

BYTE NO	SIG NAME	DESCRIPTION	BITS	7	6	5	4	3	2	1	0
1 (70H)	CCCRCERR	CRC ERRORS FROM 8BIT COUNTER TRK NO TO BE SPECIFIED WITH RX BITS 0...2		M	B	B	B	B	B	B	L

COMPOSITION OF SQ-DATA

ORIGIN	ADDR	NAME	DESCRIPTION
SYSCON	01	LOW ERROR RATE	NORMAL BEHAVIOUR
CODEC	02	QP2 CORRECTION	SECND PASS QP-PARITY CORRECTION
CODEC	04	FINGERPRINT	>=4 TRKS, T<<
CODEC	08	TRACKLOSS	>=1 TRK, T>=512 BLOCKS (1/4 SEC.)
DAPRO *	10	INTERPOLATION 2	INT 2ND GRADE (QUADRATIC)
DAPRO *	20	INTERPOLATION 1	INT 1ST GRADE (LINEAR)
DAPRO *	40	MUTE	WITH TIMEOUT 0.5 SEC.
SYSCON	80	NO DATA	AFTER TIMEOUT MUTE

NOTE *: SEE PAR. 3.1, GAINS CONTROL, BYTE 4 (56H)

	QUALDISL								QUALDISR							
ADDR.:	80	40	20	10	08	04	02	01	01	02	04	08	10	20	40	80
COLOR:	RD	RD	YL	YL	GN	GN	GN	GN	GN	GN	GN	GN	YL	YL	RD	RD
ABBR.:	ND	M	INT 1 2		TL	FP	QP2 OK		QP2 OK		FP	TL	INT 2 1		M	ND

HIGHER ORDER BITS ARE PRIORITY ENCODED BY SYSCON.

3.3.3 TIMING AND TEST 1.861.862.00

COBUS: RX, TX (8BTRMEX, 8BRECEX)

THIS BOARD SUPPLIES - TRANSFORMATTER 1.861.859.00

OVERVIEW OF ALL COMMANDS LISTED IN THIS SECTION:

POS	BITS	COMMAND	DESCRIPTION
1	7	MCCONW1	CONTROL WORD 1 MASTER CLOCK
2	12	MCVASP	VARISPEED COMMAND (2 BYTES)
3	6	MCCONW2	CONTROL WORD 2 MASTER CLOCK
4	1	EMPHASXF	TX TO SYSCON
5	1	PRESENT	TIMING AND TEST PRESENT
6	1	RTSYNC	SYSCON FORCES RT SYNC
7	1	TTERROR	TEST OF T+T PERFORMED, ERROR(S) DETECTED
8	1	TTLOCK	VCXO-PLL LOCKING CONDITION
9	1	RANGEOK	RECORDER OPERATES WITHIN VARISPD-RANGE
10	1	VCXOHI	SELECTS VCXO
11	3	FSSET	SET OF CRYSTALS (2 MAX.)
12	1	RECORDXF	RECORD TO XFORMATTER (NOM. SPEED)
13	1	EELOOP2	EE LOOP 2, FORMATTER-DASY
14	1	EMPHASIS	EMPHASIS WRITTEN IN BLOCKS

NOTE: TESTING PROCEDURE: CHECK OF TIMING PATTERNS. MAY BE CHECKED BY SYSCON AT ANY TIME.

NOTE:

COMMAND /3HEAD/ HARDWIRED TO 3HEAD-MODE ON TRANSFORMATTER AND TIMING + TEST.

DEF. OF /TTLOCK: IF 80H, BIT2, SET TO HI

TEST: DI ON OR OFF
IF DI OFF:

1 SET 51H, BIT5 TO HI (DO)
2 INDICATE A) ERROR MSG "VCXO-PLL OUT OF LOCK" IN LCD AND REMOTE(S)
B ERROR LED FLASHING
C FS LED'S NOT ILLUMINATED

IF DI ON:
DO 1 AND 2 ABOVE PLUS REPMUTE AND MAINMUTE

ELSE INDICATE LOCKING CONDITION, FUNCTIONAL.

TX ONLY: FROM TRANSFORMATTER:

BYTE NO	SIG NAME	DESCRIPTION	BITS	MSB 7	6	5	4	3	2	1	0
1 (80H)	EMPHASXF	EMPHASIS ON (SEE NOTE $)		X	X	X	X	X	X	X	1

TX ONLY: FROM TIMING + TEST:

BYTE NO	SIG NAME	DESCRIPTION	BITS	MSB 7	6	5	4	3	2	1	0
1 (80H)	TTERROR	TEST OF T+T PERFORMED, ERROR(S) DET.		X	X	X	X	X	X	1	X
	PRESENT	TIMING AND TEST PRESENT		X	X	X	X	0	X	X	X
	FSSET	SET OF CRYSTALS (2 MAX.)		M	B	L	X	X	X	X	X
	TTLOCK	VCXO-PLL OUT OF LOCK		X	X	X	X	X	1	X	X
	RANGEOK	OPERATING RANGE WITHIN 27...55kHz		X	X	X	1	X	X	X	X

M	B	L	SET OF FS
0	0	0	48 / 44.1
0	0	1	48 / 44.056
0	1	0	48 / 32
0	1	1	44.1 / 44.056
1	0	0	44.1 / 32
1	0	1	32 / 44.056

NOTE: FS CONFIGURATION IS SELECTED ON VCXO BOARD.

RX:

MCVASP1

BYTE NO	SIG NAME	DESCRIPTION	BITS	MSB 7	6	5	4	3	2	1	0
1 (81H)	MCVASP1	VARISPEED LOWER BYTE MIN (=-12.5%)		1	0	0	0	0	0	0	0
		MID (=NO DEVIATION)		0	0	0	0	0	0	0	0
		LOWER BYTE MAX (=+12.5%)		1	0	0	0	0	0	0	0

MCVASP2

BYTE NO	SIG NAME	DESCRIPTION	BITS	MSB 7	6	5	4	3	2	1	0
2 (83H)	MCVASP2	VARISPEED UPPER BYTE MIN (=-12.5%)		0	0	0	0	0	1	0	1
		MID (NO DEVIATION)		0	0	0	0	0	1	0	0
		UPPER BYTE MAX (+12.5%)		0	0	0	0	0	0	1	0

INCREMENT: 3LSB STEPS INDICATE 0.1% DEVIATION.

MCCONW1

BYTE NO	SIG NAME	DESCRIPTION	BITS	7	6	5	4	3	2	1	0
3 (85H)	MCCONW1	TR-REFEX, UNBALACED, NO VARISPEED		0	0	0	0	0	1	0	1
		VIDEO CLOCK, 25 Hz, BALANCED, VARI		0	0	1	0	0	0	1	0
		VIDEO CLOCK, 25 Hz, UNBALANCED, VARI		0	0	1	0	0	0	1	1
		VIDEO CLOCK, 29.97Hz, BALANCED, VARI		0	0	1	0	0	1	1	0
		VIDEO CLOCK, 29.97Hz, UNBAL., VARISP		0	0	1	0	0	1	1	1
		INTERNAL REFERENCE, VARISPEED		0	0	1	0	1	0	0	0
		VIDEO CLOCK, 25Hz, BALANCED, NO VARI		0	0	1	1	0	0	1	0
		VIDEO CLOCK, 25Hz, UNBAL., NO VARI		0	0	1	1	0	0	1	1
		VIDEO CLOCK, 29.97Hz, BAL., NO VARI		0	0	1	1	0	1	1	0
		VIDEO CLOCK, 29.97Hz, UNBAL.,NO VARI		0	0	1	1	0	1	1	1
		AESIN, BALANCED, NO VARISPEED		0	0	1	1	0	1	0	0
		INTERNAL REFERENCE, NO VARISPEED		0	0	1	1	1	0	0	0
		WORD SYNC, BALANCED, VARISPEED		0	1	1	0	0	0	0	0
		WORD SYNC, UNBALANCED, VARISPEED		0	1	1	0	0	0	0	1
		VIDEO CLOCK, 30Hz, BALANCED, VARI		0	1	1	0	0	0	1	0
		VIDEO CLOCK, 30Hz, UNBAL., VARISPEED		0	1	1	0	0	0	1	1
		WORD SYNC, BALANCED, NO VARISPEED		0	1	1	1	0	0	0	0
		WORD SYNC, UNBALANCED, NO VARI		0	1	1	1	0	0	0	1
		VIDEO CLOCK, 30Hz, BALANCED, NO VARI		0	1	1	1	0	0	1	0
		VIDEO CLOCK, 30Hz, UNBAL., NO VARI		0	1	1	1	0	0	1	1
		POWER SUPPLY SYNC ON		1	X	X	X	X	X	X	X

NOTE: IF DIGITAL INPUT IS SELECTED, SYSCON SETS MCCONW1 TO 34H (AESIN, BALANCED, NO VARISPEED).

MCCONW2

BYTE NO	SIG NAME	DESCRIPTION	MSB BITS	7	6	5	4	3	2	1	0
4 (87H)	MCCONW2	SAMPLING FREQUENCY 48kHz		X	X	X	X	X	X	0	1
		SAMPLING FREQUENCY 44.1kHz		X	X	X	X	X	X	1	0
		SAMPLING FREQUENCY 44.056kHz		X	X	X	X	X	X	1	1
		SAMPLING FREQUENCY 32kHz		X	X	X	X	X	X	0	0
		OUTPUT CLOCK = WORD CLOCK		X	X	X	X	1	X	X	X
	RECORDXF	RECORD TO XFORMATTER (NOM. SPEED)		X	1	X	X	X	X	X	X
	EELOOP2	EE LOOP 2 ON, XFORMATTER-DASY		X	X	0	X	X	X	X	X
	EMPHASIS	EMPHASIS ON TO XFORMATTER		X	X	X	1	X	X	X	X
	VCXOHI	VCXO WITH HIGHER FREQUENCY = ON		1	X	X	X	X	X	X	X

TRANSFORMATTER 1.861.859.00

EELOOP2, RECORD, EMPHASIS, RTSYNC

BYTE NO	SIG NAME	DESCRIPTION	MSB BITS	7	6	5	4	3	2	1	0
4 (87H)	RECORDXF	RECORD TO XFORMATTER (NOM. SPEED)		X	1	X	X	X	X	X	X
	EELOOP2	EE LOOP 2, FORMATTER-DASY		X	X	0	X	X	X	X	X
	EMPHASIS	EMPHASIS ON (SEE NOTE $)		X	X	X	1	X	X	X	X
	RTSYNC	SYNC FROM RT ON		X	X	X	X	X	1	X	X

DEF OF /RTSYNC/: THE SIGNAL HAS FOUR IMPLIFICATIONS:

A IT PROTECTS THE RT TRACK FROM OVERRITING (SOFTWARE FUNCTION)

B SERVO CONTROL IS DERIVED STRICTLY FROM THE REFERENCE TIME TRACK

C THE DATA SYNCHRONIZER (TBC) IS MAINLY CONTROLLED BY RT, AND NOT BY A MAXIMUM LIKELYHOOD DETECTION OF THE SYNC WORDS OF ALL (8) DATA TRACKS

D SPLICE DETECTION IS NOT CARRIED OUT BY INVESTIGATING THE OCCURENCE OF BLOCK SYNCS WITHIN A CERTAIN TIME WINDOW AND NOT BY DETECTING POSSIBLE DISCONTINUITIES OF BLOCK ADDRESSES.

CONSEQUENCES:

A NEW RECORD: RT IS WRITTEN, DATA SYNC. THE USER IS ADVISED TO RECORD BOTH CHANNELS, EVEN IF ONLY ONE CHANNEL CONTAINS VALID INFORMATION.

B PLAY: WHEN THE TAPE CONTAINS A STEREO RECORDING, DATA SYNC IS PREFERRED (BETTER RELIABILITY). IN THE CASE OF A TWO CHANNEL RECORDING, THE SYNCS FROM BOTH CHANNELS MAY BE DISPLACED BY UP TO 1 BLOCK (EACH +/-1/2 BLOCK REFERENCED TO RT). THEN RTSYNC HAS TO BE SELECTED.

C STEREO RECORD: RTSYNC IS NOT SELECTED. THE TBC IS CONTROLLED BY DATA FOR IMPROVED RELIABILITY AND RT IS ALWAYS OVERWRITTEN.

D SINGLE CHANNEL RECORD: RTSYNC IS SELECTED. THE TBC IS CONTROLLED BY RT AND THE RT TRACK IS PRESERVED. THE NEW TRACK IS ALIGNED TO RT ACCORDING TO FORMAT SPECS. IN THE CASE OF A NON-CONTINUOUS RT (I.E. AFTER A SPLICE) A REACTION TIME OF 157 BLOCKS, CONSISTING OF 152 BLOCKS HEAD DISTANCE, 4 BLOCKS DASY-DELAY AND 1 BLOCK FORMATTERDELAY, HAS TO BE TAKEN INTO ACCOUNT, BEFORE BLOCK NUMBERS AGAIN CORRESPOND TO SECTORS.

E ELECTRONIC EDITORS SHOULD USE RT SYNC MODE BECAUSE PUNCH-IN/-OUT AND APPEND OPERATIONS MAY LEAD TO BLOCK SYNC LOCATIONS OUTSIDE THE EXPECTED WINDOW OF THE D820X. THE D820X DETECTS SPLICE WITHOUT RT SYNC MODE AND PERFORMS CROSSFILTERING ALTHOUGH SAMPLE ACCURATE PUNCHES HAVE BEEN PERFORMED.

SEE ALSO TABLE AT THE END OF CHAPTER 3.4.

RECORDXF HANDLING: /RECORDXF/ TOGETHER WITH /RTSYNC/ DEFINE SERVO CONTROL. /RECORDXF/ DIFFERENTATES BETWEEN CONTROL FROM X-TAL OR FROM TAPE (RT OR DATA). /RTSYNC/ SEPARATES BETWEEN SYNC FROM RT OR FROM DATA.

VARISPEED HANDLING: VARISPEED IS IN ALL MODES ENABLED, EXCEPT WHEN SET TO SYNCHRONIZER INPUT (T-REFEXT) OR WHEN SET TO DIGITAL INPUT. THE DO-BYTE 00, BIT 05, IS SET TO HI, WHEN VARISPEED = ON OR WHEN /TTLOCK/ = HI (UNLOCK) AND THE APPROPRIATE SAMPLING FREQUENCY LED IS SWITCHED OFF.

APPEND MODE HANDLING: (FROM SERIAL PORT ONLY)
/APE/ + PLAY : RT OR DATA SYNC POSSIBLE (USER)
/APE/ + REC : INITIALIZE /RTSYNC/ AND SET SET /RECORDXF/ TO HI
/APD/ : ESTABLISH PREVIOUS RT SYNC MODE.

NOTE $: EMPHASIS HANDLING:

A W/O DI : PLAY:
INDEPENDENT OF PREVIOUS STATUS, /EMPHASIS/ IS SET ACCORDING TO EMPHASIS FLAG ON TAPE (EMPH BIT IN BLOCKS, DETECTED BY TRANSFORMATTER). OVERRIDING BY TOGGLE SWITCH POSSIBLE. IF EMPHASIS IS NOT SET ACCORDING TO FLAG ON TAPE: EMPHASIS KEY (IF ASSIGNED) AND EMPH BULB (ON SECOND. KEYBD.) ON AND ERROR INDIC. FLASHING AS LONG AS ERRONEOUS STATUS IS VALID. ERROR MESSAGE: TAPE EMPH MISMATCH. SYSCON SENDS STATUS TO
- GAINS CONTROL FOR DO, AI AND AO
- T+T FOR XFORMATTER
- PDM CONTROL FOR PDM MODULATOR

AS SET BY EMPHASIS KEY. DO-BYTE (51H) IS EITHER 100 FOR NO EMPH., RECEIVER MANUAL OVERRIDE DISABLED, OR 110 FOR 50/15 USEC. EMPHASIS, RECEIVER MANUAL OVERRIDE DISABLED. PATTERNS 000 AND 111 ARE USED IN TRANSPARENT MODE FROM DI ONLY (STOP OR INPUT, SEE BELOW).

RESET OF OVERRIDE FUNCTION:
AUTOMATIC MODE RESTORED WHEN SETTING IDENTICAL TO FLAG FROM TRANSFORMATTER.

STOP:
EMPHASIS MAY BE CHANGED ANY TIME. SYSCON SENDS STATUS TO
- GAINS CONTROL FOR DO, AI AND AO
- T+T FOR XFORMATTER
- PDM CONTROL FOR PDM MODULATOR AS SET BY EMPHASIS KEY.

RECORD:
IF EMPHASIS STATUS ON:
TRANSFORMATTER WRITES EMPHASIS BIT IN BLOCKS. OVERRIDING BY TOGGLE SWITCH NOT POSSIBLE.
IF EMPHASIS KEY SET TO OFF:
NO EMPHASIS FLAG IS RECORDED ON TAPE. OVERRIDING BY TOGGLE SWITCH NOT POSSIBLE.

B WITH DI : NOT PLAY MODE: BIT PATTERN = 110 INDEPENDENT ON PREVIOUS STATUS, /EMPHASIS/ IS SET ACCORDING TO PATTERN DETECTED BY DI, DAPRO IF, SIGNAL /DIEMPH/. OVERRIDING NOT POSSIBLE!

NOTE: VALID ONLY IF D820X SET TO DIGITAL INPUT. SYSCON SENDS STATUS TO
- GAINS CONTROL FOR DO, AI AND AO
- T+T FOR XFORMATTER
- PDM CONTROL FOR PDM MODULATOR

NOT PLAY MODE: BIT PATTERN = 100 INDEPENDENT ON PREVIOUS STATUS, /EMPHASIS/
IS SWITCHED OFF. OVERRIDING NOT POSSIBLE!

NOTE: VALID ONLY IF D820X SET TO DIGITAL INPUT. SYSCON SENDS STATUS TO
- GAINS CONTROL FOR DO, AI AND AO
- T+T FOR XFORMATTER
- PDM CONTROL FOR PDM MODULATOR

NOT PLAY MODE: BIT PATTERN = 000
DEFAULT IS NO EMPHASIS, WITH OVERRIDE BY TOGGLE KEY ENABLED.
TRANSMITTING AS ABOVE. NOT PLAY MODE: BIT PATTERN = 111

A SIGNAL /DDEMPH/, GAINS CONTROL (51H):
(TRANSPARENT MODE) PATTERN 111 TRANSMITTED.

B SIGNAL /EMPHASIS/: SYSCON ACTS SIMILAR
AS WITH PATTERN 000. DEFAULT = NO EMPHASIS, KEY ENABLED. ERROR MESSAGE AND FORMAT MISMATCH MESSAGE.

PLAY MODE: REACTS TO INFO CONTAINED IN DATA BLOCKS, INDEPENDENT ON OVERRIDE SPECS FROM DI.

IMPORTANT: THIS IS AN EXCEPTION TO THE PRIORITY LEVELS DESCRIBED UNDER "FS HANDLING", PAR. BC. THE HIERARCHICAL STRUCTURE THERE IS: 1. DI, 2. RT, 3. KEYBD. THIS HAS TO BE CHANGED HERE TO 1. DATA FROM TAPE (EMPHASIS FLAG IN BLOCKS), 2. DI (IN ACCORDANCE WITH SPECIAL CONDITIONS PART E "CONSUMER" BELOW), 3. KEYBD (AND REMOTES). OVERRIDE WITH TOGGLE KEY POSSIBLE. ERROR LED FLASHING AND MESSAGE "TAPE EMPH MISMATCH" AS AS LONG AS FLAG FROM TAPE DOES NOT CORRESPOND TO KEY SETTING.

RECORD:
SYSCON ACTS ACCORDING TO DI-FLAG, OR TO A SELECTED CONFIGURATION AS DESCRIBED ABOVE. IT MAY THEN RECEIVE

"EMPHASIS ON" STATUS FROM T+T (XFORMATTER) AGAIN, WHICH IT NEGLECTS. OVERRIDING BY TOGGLE SWITCH NOT POSSIBLE. FOR PATTERN 111 ONLY (CCITT J17): ERROR MESSAGE AND FORMAT MISMATCH!

SPECIAL CONDITIONS:

C SINGLE TRACK RECORDING: EMPHASIS AFFECTS BOTH CHANNELS SIMULANEOUSLY (STEREO-MODE), BECAUSE THE AES/EBU FORMAT DOES NOT ALLOW FOR INDIVIDUAL TRANSMISSION, AND TO KEEP HARDWARE, SOFTWARE AND OPERATION AS SIMPLE AS POSSIBLE.

WHEN A SINGLE CHANNEL RECORDING HAS BEEN MADE, THE TRANSFORMATTER READS THE EMPHASIS FLAG CORRECTLY IN READ AFTER WRITE PROVIDED, THAT THE HEAD DISTANCE HAS BEEN ADJUSTED CORRECTLY. WHEN AN ATTEMPT IS MADE TO WRITE THE REMAINING CHANNEL WITH A DIFFERENT EMPHASIS SETTING TO THE ONE WHICH IS FOUND ON THE READ-BACK CHANNEL, THE SYSCON SETS THE EMPHASIS ACCORDING TO THE PREVIOUSLY RECORDED CHANNEL AND DISPLAYS AN ERROR MESSAGE IN THE LCD: "OVERRIDE DISABLED" IF ANY ATTEMPT IS MADE TO OVERRIDE IT MANUALLY, OR IT DISPLAYS AN ERROR MESSAGE "DI EMPH MISMATCH" AS LONG AS THE DI EMPHASIS MODE DOES NOT MATCH.

D CCITT J17 CONSTANTS: PATTERN 111 (CCITT J17): SINCE THE RECORDER IS NOT EQUIPPED WITH THE REQUIRED TIME CONSTANTS, IT WILL OUTPUT AN ERROR MESSAGE, WHEN FORCED TO RECORD. IN STOP OR INPUT MODE THE DI-BYTE WILL BE EQUAL TO THE DO-BYTE.

E CONSUMER MODE: STOP, INPUT OR RECORD MODE:
IF BIT 1 IN BYTE 00 OF THE CONTROL WORD IS SET LOGICAL LOW, THEN CONSUMER MODE IS SPE- CIFIED. IN THIS MODE ONLY THE EMPHASIS FLAG IS PROCESSED. OVERRIDE DISABLE IS SPECIFIED BECAUSE THERE IS NO MANUAL OVERRIDE MODE AND TO ELIMINATE OPERATIONAL ERRORS. INPUTS FROM THE KEYBOARD OR FROM EMPHASIS FLAG IN DATA BLOCKS ARE CONSIDERED INVALID. ERROR MESSAGE "ILLEGAL DI FORMAT" (BECAUSE THE FORMAT IS ONLY PARTIALLY PROCESSED) AND ERROR LED.

PLAY:
EXCEPTION AS WITH PROFESSIONAL DI FORMAT:
EMPHASIS FLAG IN DATA BLOCKS IS PRIORITY ONE. OVERRIDE WITH TOGGLE KEY POSSIBLE. ERROR LED FLASHING AND MESSAGE "TAPE EMPH MISMATCH" AS AS LONG AS FLAG FROM TAPE DOES NOT CORRESPOND TO KEY SETTING. NOTE: OTHER ERROR MESSAGES MAY OVERRIDE "TAPE EMPH MISMATCH". EXAMPLE: EXTERNAL FS=44.1 kHz; TAPE=48 kHz; USER SELECTS 48 kHz TO PLAY TAPE. ERROR MESSAGE "CHECK EXTERNAL SYNC" (WITH HIGHER PRIORITY) APPEARS, BECAUSE THE LOCAL X-TAL CONFIGURATION IS NOT SUITED TO REMOTE SYNC SOURCE.

NOTE ON FS HANDLING SEE PAR. 3.4 BELOW.

3.3.4 RT/TC CODEC 1.861.861/761

COBUS: 2 INDIVIDUAL RECEIVERS, TRANSMITTERS

THIS BOARD SUPPLIES - ADAPTIVE RUN PROCESSOR 1.861.860/760

OVERVIEW OF ALL COMMANDS LISTED IN THIS SECTION:

POS	BITS	COMMAND	DESCRIPTION
1	48	RTADDR	VALUE OF RT (BIN) TO SYSCON
2	1	TXRTCRC	RT ADDRESS INVALID (CRC ERROR)
3	32	RTATOCO	RT ADDR TO RT/TC CODEC
4	1	FLAG	INDICATES TWIN RECORDING (FROM SYSCON)
5	3	SAMPFREQ	48, 44.1, 32 kHz, OR UNSPECIFIED (FROM SYSCON)
6	3	FORMAT	DASH FORMAT VERSION (FROM SYSCON)
7	3	AUXTRKFO	AUXILIARY TRACK FORMAT (FROM SYSCON)
8	6	RESERVED	UNSPECIFIED BITS (FROM SYSCON)
9	64	TCADDR	VALUE OF TIME CODE (BCD), READ 8 TIMES
10	1	TCREADY	SYSCON READY TO RECEIVE TC ADDRESS
11	1	PRESENT	RT/TC CODEC PRESENT
12	1	TXTCMOD	SELECTS TC RECORDING MODE (UNMODULATED/MODULATED)
13	1	ARPOFF	ADAPTIVE OR TRANSPARENT MODE FOR RUN PROCESSOR
14	1	TCDELAY	TC OUTPUT DELAY
15	1	FREEZED	FREEZE CONTENT OF DRAM IN ADAPTIVE RUN PROCESSOR
16	1	FRAMERA	TC FRAME RATE TO TC CODEC
17	1	TCREAD	TC STATUS = READ FROM TAPE
18	1	EETC	EE-LOOP TC (AFTER WRITE-DELAY TO CLK RECOVERY)
19	1	TCUP	INDICATES TAPE DIRECTION
20	1	TCMOD	SELECTS DEMODULATION MODE (UNMODULATED/MODULATED)
21	1	FSTC	SPECIFIES FS FOR TC OUTPUT DELAY TIME

A) RT CODEC

TX ONLY:

RTADDR0 . . . 5, TXRTCRC

BYTE NO	SIG NAME	DESCRIPTION	BITS	MSB 7	6	5	4	3	2	1	0
1 (9EH)	TXRTCRC	CRC ERROR, ALL FOLLOW. BYTES INVALID	1	X	X	X	X	X	X	X
2 (90H)	RTADDR0	VALUE OF REFERENCE TIME (BIN)RTCONW1	M	6	5	4	3	2	1	0
3 (92H)	RTADDR1	VALUE OF REFERENCE TIME (BIN)RTCONW2	7	6	5	4	3	2	1	L
4 (94H)	RTADDR2	VALUE OF REFERENCE TIME (BIN)ADDR1	M	6	5	4	3	2	1	0
5 (96H)	RTADDR3	VALUE OF REFERENCE TIME (BIN)ADDR2	7	6	5	4	3	2	1	0
6 (98H)	RTADDR4	VALUE OF REFERENCE TIME (BIN)ADDR3	7	6	5	4	3	2	1	0
7 (9AH)	RTADDR5	VALUE OF REFERENCE TIME (BIN)ADDR4	7	6	5	L	X	X	X	X

NOTE: SYSCON RECEIVES ALL BYTES SEQUENTIALLY AS DESCRIBED ABOVE. IT MAY STOP THE REQUEST CYCLE AFTER EVERY BYTE. TIME LIMIT TO READ ALL 7 BYTES: <4 msec.

FORMAT OF CONTROL WORD (CNTL W): SEE BYTES 1,2 BELOW

RX:

SAMPFREQ, FORMAT, FLAG, AUX TRK FORMAT, RESERVED, RTATOCO1...3

BYTE NO	SIG NAME	DESCRIPTION	BITS	7	6	5	4	3	2	1	0
1 (91H)	FLAG	SET TO 1 FOR TWIN FORMAT		1							
	SAMPFREQ	SAMPLING FREQUENCY TO RT/TC CODEC			M	B	L				
		000 UNSPECIFIED									
		001 48kHz NOMINAL									
		010 44.1kHz NOMINAL									
		011 32kHz NOMINAL									
		100 44.056kHz									
		101...111 RESERVED									
1 (91H)	FORMAT	DASH FORMAT VERSION						0	0	1	
		001 INDICATES DASH M, NORMAL DENSITY									
1 (91H)	AUXTRKFO	AUX TRACK FORMAT									0
2 (93H)	AUXTRKFO	AUX TRACK FORMAT		0	1						
		XX0 INDICATES ANALOG CUE TRACKS									
		XX1 INDICATES PDM CUE TRACKS									
		X0X INDICATES AUX3 NO AUX DATA									
		X1X INDICATES AUX3 AUX DATA									
		0XX INDICATES TC UNMODULATED									
		1XX INDICATES TC MODULATED									
		(ALL UNLESS OTHERWISE SPECIFIED)									
2 (93H)	RESERVED	RESERVED BITS				0	0	0	0	0	0
		NOT YET SPECIFIED, SET TO 000000									
3 (95H)	RTATOCO1	RT ADDR 1 WITH OFFSET FROM SYSCON		M	6	5	4	3	2	1	0
4 (97H)	RTATOCO2	RT ADDR 2 WITH OFFSET FROM SYSCON		7	6	5	4	3	2	1	0
5 (99H)	RTATOCO3	RT ADDR 3 WITH OFFSET FROM SYSCON		7	6	5	4	3	2	1	0
6 (9BH)	RTATOCO4	RT ADDR 4 WITH OFFSET FROM SYSCON		3	2	1	L	X	X	X	X

NOTE: PRESET ALWAYS COMPLETE (DO NOT SKIP BYTES), NO TIME LIMIT.
NOTE: BYTES 1,2 NOT TO BE CHANGED IN RECORD MODE.

PROCEDURE TO SET RT (TRANSMITTED TO HARDWARE):

1. CALCULATE NEW RT ADDRESS (WITH OFFSET).
2. SET RT BYTES 2...6:

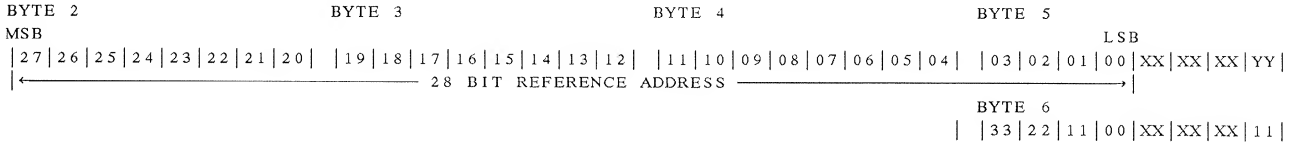

SET YY TO 00.

SEQUENCE FOR SETTING: BYTE 2 - -→ BYTE 6.

3. SET CONTROL WORD (16 BITS):

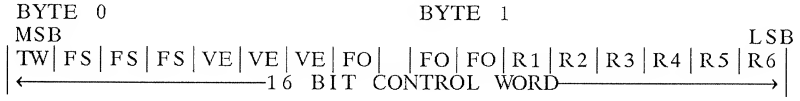

TW: TWIN FLAG (SET TO 1)
FS: SAMPLING FREQUENCY (SEE RX PARAGRAPH ABOVE)
VE: DASH FORMAT VERSION (SET TO 001 FOR DASH M, NORMAL DENSITY)
FO: AUX TRACK FORMAT (SEE RX PARAGRAPH ABOVE)
Rn: RESERVED BITS

THERE IS NO TIME LIMIT FOR SETTING RT.

PROCEDURE TO READ RT (TRANSMITTED FROM HARDWARE):

RT TRANSMITTER ADDRESS OFFSET BYTE:

BYTE 00 (9EH)

| CRC | XXX | XXX | XXX | XXX | XXX | XXX | XXX |

BYTE 0 (90H)								BYTE 1 (92H)							
C15	C14	C13	C12	C11	C10	C09	C08	C07	C06	C05	C04	C03	C02	C01	C00
←16 BIT CONTROL WORD→															

BYTE 2 (94H)								BYTE 3 (96H)							
R15	R14	R13	R12	R11	R10	R09	R08	R07	R06	R05	R04	R03	R02	R01	R00
←28 BIT REFERENCE ADDRESS→															

BYTE 4 (98H)								BYTE 5 (9AH)							
R15	R14	R13	R12	R11	R10	R09	R08	R07	R06	R05	R04	XXX	XXX	XXX	XXX
←28 BIT REFERENCE ADDRESS→															

CRC: CRC ERROR FLAG. IF LOGICAL LO: NO ERROR.
ACCESS SEQUENCE: READ BYTE 00 FIRST AND BYTE 5 LAST.
BYTE 0 SETS A WRITE PROTECTION FLAG TO PREVENT FROM OVERWRITING DURING
READ ACCESS; BYTE 5 RELEASES THE WRITE PROTECTION FLAG.
TIME LIMIT FOR READING RT: <4msec.

AUXTRKFO HANDLING: PLAY:
SIGNALS /IAN/PDM/ AND /TCMOD/ ARE AUTOMATICALLY SET ACCORDING TO AUXTRKFO (SEE ABOVE).

RECORD: STUDER RECORDERS ALWAYS WRITE YX1 IN AUXTRKFO (CUE MODULATED). BIT Y IS SET ACCORDING TO /TXTCMOD/.

THE FLAG FOR AUX TRACK USAGE IS SET ACCORDING TO THE AUX4MIX SETTING. AUX4MIX = ON INDICATES AUX3 TRACK USED FOR AUXILIARY DATA (X1X). IN READ MODE, IN THIS CASE THE AUX 3 OUTPUT IS SET TO TTL LEVEL, ELSE TO NOMINAL LINE OUTPUT LEVEL. NOTE THAT IT IS NECESSARY TO START A RECORDING WITH THE EXACT AUX TRACK FORMAT SETTING, ALTHOUGH IT IS POSSIBLE TO OVERWRITE THE AUXTRKFO. A CONFLICTING SITUATION MAY EXIST WHEN A TRACK SEQUENTIAL RECORDING HAS BEEN MADE WITH AN ATTEMPT FOR DIFFERENT AUX4MIX SETTINGS. IN THIS CASE THE RECORDER WILL INHIBIT A DIFFERENT SETTING FROM THE ONE USED IN THE FIRST INSTANCE AND OUTPUT AN ERROR MESSAGE: INVALID AUX TRK SETTING.

OVERRIDING RT AUX TRACK FLAGS: ALL FLAGS (FS, TC, CUE, AUX4MIX) AS WRITTEN ON TAPE MAY BE DELIBERATELY OVERWRITTEN WITH SEVERAL KEYS. FS HANDLING IS SEPARATELY DESCRIBED. FOR ALL OTHER CASES (EXCEPT EMPHASIS): AN ERROR MESSAGE "AUTO MODE DISABLED" IS DISPLAYED IN THE LCD AND THE "ERROR" LED IS NOT FLASHING.

B) TC CODEC

TX ONLY:

TCREADY BYTE NO	SIG NAME	DESCRIPTION	MSB BITS	7	6	5	4	3	2	1	0
1 (B0H)	TCREADY	INITIALIZES TC TX FROM TC CODEC		X	X	X	X	X	X	X	X

NOTE: READ BYTE (B0H) IN ORDER TO INDICATE READ-OUT OF TC WORDS.

TCADDR, BYTE NO	TC BYTES SIG NAME	IN SEQUENTIAL ORDER DESCRIPTION	MSB BITS	7	6	5	4	3	2	1	0
2 (B2H)	BYTE 00	FRAME UNITS USER BITS		1	2	3	4	M	B	B	L
	BYTE 01	FRAME TENS DROP FRAME FLAG (NOTE $) COLOR FRAME FLAG (NOTE $) USER BITS		1	2	3	4	B	B	M	L
	BYTE 02	SECOND UNITS USER BITS		1	2	3	4	M	B	B	L
	BYTE 03	SECOND TENS UNASSIGNED USER BITS		1	2	3	4	B	M	B	L
	BYTE 04	MINUTES UNITS USER BITS		1	2	3	4	M	B	B	L
	BYTE 05	MINUTES TENS UNASSIGNED USER BITS		1	2	3	4	B	M	B	L
	BYTE 06	HOURS UNITS USER BITS		1	2	3	4	M	B	B	L
	BYTE 07	HOURS TENS UNASSIGNED USER BITS		1	2	3	4	B	B	M	L

PRESENT, BYTE NO	TCREAD SIG NAME	DESCRIPTION	MSB BITS	7	6	5	4	3	2	1	0
3 (B4H)	PRESENT	TC CODEC PRESENT		X	X	X	X	X	X	X	0
	TCREAD	TC STATUS INDIC.: TC READ OFF TAPE		X	X	X	X	X	X	1	X
	TCUP	FORWARD TAPE DIRECTION		X	X	X	X	X	1	X	X

TC READ SEQUENCING:

1 SEND /TCREADY/.
2 CHECK /TCREAD/, WHEN HI: TC = VALID, OTHERWISE BLANK DISPLAY.
3 READ /TCUP/, INDICATES SEQUENCE OF FOLLOWING BYTES. BYTES ARRIVE IN REVERSE ORDER WHEN /TCUP/ = LO. THE BIT SEQUENCE WITHIN A BYTE IS ALWAYS PRESERVED.
4 READ (B2H) 8 TIMES.

IGNORE /TCREAD/ IF TAPESPEED >1.0 m/sec.

FORMATTING TC INFORMATION:

POSITION	0	9	8	7	6	5	4	3	2	1	
MODE 1:	A	H2	H1	M2	M1	S2	S1	F3	F2	F1	CODE
MODE 2:	A	U8	U7	U6	U5	U4	U3	U2	U1	U	USER BITS (HEX CHARACTERS)
MODE 3:	A	-	-	0	9	8	7	6	5	F	UNASSIGNED BITS (BIN. DIGITS)
ADDRESSES:	49	47	45	43	41	39	37	35	33	31	

F = FRAMES
A = (t) TC
U = USER BITS
F = FLAGS

U8 = BINARY GROUP 8
U7 = BINARY GROUP 7
U6 = BINARY GROUP 6
U5 = BINARY GROUP 5
U4 = BINARY GROUP 4
U3 = BINARY GROUP 3
U2 = BINARY GROUP 2
U1 = BINARY GROUP 1

0 = BIT 59
9 = BIT 58
8 = BIT 43
7 = BIT 27
6 = BIT 11 (COLOR FRAME FLAG)
5 = BIT 10 (DROP FRAME FLAG)

NOTE: ASCII-CHARACTERS ARE NOT DISPLAYED.

NOTE: TC VALIDITY CONFIRMATION:

1 CODE PRESENT ? IT IS ASSUMED THAT A VALID CODE IS RECEIVED WHEN A CONSECUTIVE TRANSITION FOLLOWS.
2 OUT-OF-RANGE DETECTION.
3 IS TRANSITION WITHIN EXPECTED WINDOW (0...75%) ?
4 SYNC WORD CORRECT ? 12 LOGICAL HI BITS ARE COUNTED.
5 ADDRESS PLAUSIBILITY CHECK.
6 IGNORE /TCREAD/ IF TAPESPEED >1.0 m/sec.

CRITERIA 1...4 ARE CHECKED BY HARDWARE. POS. 5 AND 6 ARE CHECKED BY THE SYSTEM CONTROLLER FOR DISPLAY PURPOSES ONLY.

THE LAST VALID FRAME IS FREEZED FOR A SHORT TIME IN ORDER TO REDUCE FLICKERING (SYSCON).

4 FRAMES ARE DISCARDED WHEN AN ERROR OCCURS. /TCREAD/ IS MORE STABLE UNDER THIS CONDITION (HARDWARE).

RX:

FRAMERA, TXTCMOD, ARPOFF, FREEZED, TCDELAY, TCMOD, FSTC, EETC

BYTE NO	SIG NAME	DESCRIPTION	BITS (MSB) 7	6	5	4	3	2	1	0
1 (B1H)	FREEZED	FREEZE CONTENT OF DRAM, ELSE ADAPT.	X	X	X	X	X	X	X	1
	ARPOFF	SELECT FIXED EQ TABLE, ELSE ADAPT.	X	X	X	X	X	X	1	X
	TCDELAY	TC OUTPUT DELAY ON, ELSE OFF	X	X	X	X	X	1	X	X
	TXTCMOD	WRITE MODULATED TC	X	X	1	X	X	X	X	X
	FRAMERA	TC FRAME RATE = 25, ELSE 29 OR 30	0	X	X	X	X	X	X	X
	EETC	EE LOOP TC ON	X	1	X	X	X	X	X	X
	TCMOD	TC MODULATED ON TAPE	X	X	X	1	X	X	X	X
	FSTC	FS=48kHz, ELSE=44.1 OR 44.056kHz	X	X	X	X	1	X	X	X

NOTE: TC READOUT FOR TAPE SPEED <1m/sec. POSSIBLE. TAPE NEEDS TO BE IN CONTACT WITH READ HEAD. MOVE LIFTER IN AFTER SEQUENCE WIND, THEN STOP, PLAY, REC, LOC, TAPE DUMP, EDIT, IF TAPE SPEED 1m/sec.

NOTE: /TXTCMOD/ TO BE SET TOGETHER WITH APPROPRIATE BIT IN RT CONTROL WORD.

NOTE: /TCDELAY/ IS ENABLED IN PLAY MODE ONLY (AUTO MODE FROM KEYBOARD). OVERRIDE BY REMOTES AND/OR KEYBOARD POSSIBLE WHEN IN AUTO MODE.

RUN PROCESSOR 1.861.860/760

TAPETYPE, ARPOFF, FREEZED, MVARI

BYTE NO	SIG NAME	DESCRIPTION	BITS 7	6	5	4	3	2	1	0
1 (B1H)	FREEZED	FREEZE CONTENT OF DRAM, ELSE ADAPT.	X	X	X	X	X	X	X	1
	ARPOFF	SELECT FIXED EQ TABLE, ELSE ADAPT.	X	X	X	X	X	X	1	X
	MVARI	TAPE SPEED LESS THAN 14.47 IPS.NOTE*	X	X	X	X	X	1	X	X
	TAPETYPE	TAPE TYPE A, ELSE B	X	X	X	X	0	X	X	X

NOTE *: /MVARI/ NOT USED ANYMORE.

NOTE: ADAPTIVE/TRANSPARENT (TABLE)/FREEZED MODE: THE TRANSPARENT MODE (/ARPOFF/) OR "REFERENCE EQ TABLE" IN THE ALIGNMENT MENU BYPASSES THE ADAPTIVE PROCESS, THUS PERMITTING TO WORK WITH ONE OF TWO POSSIBLE ROM TABLES (SELECTED WITH /TAPETYPE/). ALL PREVIOUSLY STORED OFFSET VALUES FROM THIS TABLE IN RAM ARE SAFED AND IMMEDIATELY AVAILABLE WHEN ACTIVATED IN ADAPTIVE MODE (/FREEZED/ DISABLED).

THE FROZEN MODE STOPS ADAPTATION. PREVIOUS VALUES IN RAM ARE SAFED AND NOT CHANGED ANYMORE. SEE CRITERIA BELOW FOR USE OF

THE FROZEN MODE. THE MODE IS ACTIVATED ONLY TO PROTECT THE ADAPTIVE RUN PROCESSOR FROM ANY POSSIBLE ERRONEOUS ADAPTATION TO NON-VALID DATA. LOCAL ACTIVATION (FROM KEYBOARD) POSSIBLE.

MENU STRUCTURE:

IN "ALIGNMENT AUDIO":	
RECORD CURRENT B +/- . . .	DISPLAY RECORD CURRENT VALUE
REFERENCE EQ TABLE (selected)	SELECT TABLE, SEND COMMAND /ARPOFF/, DISPLAY "SELECTED" WHEN ACTIVATED WITH STORE.
STOP ADAPTATION (selected)	FREEZE CONTENT OF DRAM, SEND COMMAND /FREEZED/, DISPLAY "SELECTED" WHEN ACTIVATED WITH STORE.
PAR. BACKUP RS232 || VERIFY SAFE LOAD	

NOTE ON FROZEN TABLE MODE:
THE CRITERIA TO STOP ADAPTATION ARE:

1 /REPMUTE/ ACTIVE (FROM DAPRO) FROM MORE OR EQUAL TO ONE CHANNEL.
2 NOT IN PLAY (OR RECORD) MODE.

NOTE THAT THE ADAPTIVE RUN PROCESSOR IS FURTHER PROTECTED BY CIRCUITRY ON THE DETECTOR II BOARD WHICH DISCONNECTS POWER TO THE COMPARATORS WHEN THE SAME CONDITION AS 2 ABOVE OCCURS. NO INVALID TRANSITIONS SHOULD REACH THE RUN PROCESSOR, I.E. DUE TO RFI OR EMI TO THE HEADS.

TIME CODE DELAYS VS. DIGITALAUDIO DELAYS

CELLS | BLOCKS DELAY {msec.}	REPRO DELAY OFF		25 FR.		29, 30 Fr.	
48 kHz	- - -	166.5	477	238.5	572	238.5
	83		120		120	
44.1 kHz 44.056 kHz	- - -	166.5	521 (1)	238.5	624 (2)	238.5
	91		131 (3)		131 (3)	
	←- INPUT DELAY -→		←——— REPRO DELAY ———→			

THE NUMBERS ABOVE ARE EXACT VALUES. ACTUAL (IMPLEMENTED) VALUES WITH BOARD 1.861.761.21: (VERSIONS -22 UP HAVE EXACT VALUES)
(1) ERROR = 44 CELLS = 1/4 FRAME
(2) ERROR = 52 CELLS = 1/3 FRAME
(3) ERROR = 11 msec. (120 msec. IMPLEMENTED).

NOTE: FS HANDLING:
THE MASTER HAS NO A PRIORI INFORMATION ABOUT THE SAMPLING FREQUENCY. IN A MUTUAL AGREEMENT IT IS DECIDED, THAT ALWAYS THE TOP LED ON THE SECONDARY KEYBOARD INDICATES THE HIGHER FS. THEREFORE THE MASTER TRANSMITS ONLY "FS HI" OR "FS LO". IN "FS LO" THE KEY IS ILLUMINATED. DURING POWER UP, THE SYSCON TESTES

T+T (/FSSET/, 80H) ON CRYSTAL-CONFIGURATION (REPLACING VCXO-BOARDS IN OPERATION IS NOT PERMITTED) AND STORES THE CRYSTAL (HARDWARE) SET IN REGISTERS, DESIGNATED "XTALFS".

OUTPUTS FROM SYSCON:
2 TEMPORARY REGISTERS "ACTFS" AND "ACTTS" STORE THE ACTUAL FS AND ACCOMPAGNING TAPE SPEED (TS) RESPECTIVELY. UPDATING THESE REGISTERS IS SUBJECT TO MEASURES DESCRIBED BELOW. THE REGISTER "ACTTS" DIRECTLY CONTROLS THE TAPE DECK MPU'S COMMAND SET "SPS" VIA MASTER MPU (TS). THE REGISTER "ACTFS" CONTROLS

- THE MASTER MPU (ACTFS) FOR DISPLAY AND CONVERSION
- T+T (/MCCONW2/, 87H). DIVIDER RATIOS, ETC.
- RT CODEC (/SAMPFREQ/,91H). ADDRESS CONTENT
- TC CODEC (/SYSCFS/,B1H), TO RUN PROCESSOR
- DAPRO IF VIA GAINS CONTROL (/DDEMPH/, 51H), DO
- TIME DISPLAY CONVERSION ROUTINES. ALL ARE DESIGNATED RECEIVERS OF THE SYSCON.

INPUTS TO SYSCON:
A) W/O DI: AA) FROM TERMINAL:
COMMANDS FROM THE TERMINAL UPDATE "ACTFS" AND "ACTTS" DIRECTLY. "XTALFS" IS NOT TESTED. A CORRECT INPUT T-REFEXT IS ASSUMED. OVERRIDING BY QUIT-COMMAND ONLY. THEN, THE CONTENT OF REGISTER "FSIN" IS SELECTED (PREVIOUS VALUE). IN RECORD, COMMAND ARE NOT ACCEPTED.
AB) PLAY:
(COMMANDS FROM KEYBOARD OR RT CODEC) INDEPENDENT ON PREVIOUS STATUS, FS IS SET ACCORDING TO /RTADDR0/ (90H) FROM RT CODEC. THE INFO IS CHECKED AGAINST "XTALFS". IF THERE IS A MISMATCH, AN ERROR MSG TYPE B IS DISPLAYED. IF THERE IS NO VALID INFO FROM RT CODEC, SYSCON SELECTS /TSLO/. IF THE INFO IS STILL INVALID, AN ERROR MSG TYPE B IS DISPLAYED: FORMAT MISMATCH; ASSUMING THAT NO RT HAS BEEN WRITTEN. TIME-OUT FOR EVERY NEW ACTION = 10 SECTORS (20msec.). DO-BYTE 00, /DDEMPH/: BITS 6,7 = 00 WHEN FS = 44.056, OTHERWISE AS SPECIFIED BY AES/EBU FORMAT. OVERRIDE DISABLED. IF THE FS IS UNSPECIFIED IN THE RT ADDRESS (000), OVERRIDE BY TOGGLE SWITCH IS ENABLED. DISPLAY: "FS UNSPECIFIED", MSG TYPE A.
AC) STOP:
FS MAY BE CHANGED ANY TIME FROM KEYBOARD.
AD) RECORD (RT):
FS IS RECORDED ACCORDING TO PREVIOUS STATUS.

B) WITH DI: BA) STOP OR INPUT MODE:
BIT PATTERNS 01,10,11: RECORDER IS SET ACCORDINGLY AFTER CHECK WITH "XTALFS". OVERRIDING BY TOGGLE SWITCH NOT POSSIBLE. IF CHECK FAILS: ERROR MSG TYPE B. PATTERN 00: THE PREVIOUS STATE IS KEPT IN "ACTFS". OVERRIDING ENABLED.

NOTE: VALID ONLY, IF D820X IS SET TO DIGITAL INPUT.

BB) RECORD (RT):
AS ABOVE. THE SYSCOM COMPARES /DIEMPH/ (58H) WITH /RTADDR0/ (90H). IF BOTH ARE NOT EQUAL (I.E. IN RT SYNC MODE), AN ERROR MSG TYPE B IS DISPLAYED AND THE TAPE TRANSPORT IS BROUGHT IN STOP MODE.
BC) PLAY:
INPUTS FROM KEYBD, RT, DI. PRIORITY LEVELS: 1 = DI, 2 = RT, 3 = KEYBD.

NOTE: ERRONEOUS PLAYBACK POSSIBLE IF DI NOT SET ACCORDING TO RT (SPEED AND FS DEVIATION). ERROR MSG IN LCD ONLY.

PLAY (KEY "RT SYNC" ENABLED)		RECORD (KEY "RT SYNC" DISABLED)		
X	SERVO CONTROLLED BY DATA	Y	SERVO CONTROLLED BY RT ! (*)	
X	RT MODE: READ RT	Y	RT MODE: READ ONLY ! (*)	
X	LED "RT SYNC": OFF	Y	LED "RT SYNC": FLASHING (*)	
Z	SERVO CONTROLLED BY RT	T	U	SERVO CONTROLLED BY CRYSTAL
		T	U	RT MODE: WRITE RT
Z	RT MODE: READ RT	T	U	LED "RT SYNC": OFF
		T	V	SERVO CONTROLLED BY RT (**)
		T	V	RT MODE: READ ONLY
Z	LED "RT SYNC": ON	T	V	LED "RT SYNC": FLASHING

X = KEY "RT SYNC" OFF
Z = KEY "RT SYNC" ON
Y = CH 1 OR CH 2 SAFE
T = CH 1 AND CH 2 : READY
U = KEY "RT SYNC" OFF
V = KEY "RT SYNC" ON
(*) = INDEPENDENT OF KEY "RT SYNC"
(**) = IT THE TAPE CONTAINS NO RT, THE TAPE DECK ESTABLISHES "STOP" MODE AND THE MESSAGE "NO REFERENCE TRACK" IS DISPLAYED.

VIDEO-/FILM-CLOCKS VS. SAMPLING FREQUENCIES

ORIGIN	LINES	FRAMES	RELATIONSHIP TO SAMPL. FREQUENCIES			
		sec.	32	44.1/1.001	44.1	48
NTSC monochrome	525	30,60	(15/16)	---	1470	1600
NTSC color	525	30/1.001	---	1470	---	(8008/5)
PAL monochr./col.	625	25	1280	---	1764	1920
FILM	---	48	---	---	---	1000

IN ALL CASES WHERE NO SIMPLE INTEGER RATIO EXISTS (DENOTED BY --- OR NUMBERS IN BRACKETS), AN ERROR MESSAGE IS DISPLAYED IN THE LCD DISPLAY, READING "NO INTEGER RATIO", AND THE RED "ERROR" LED IS FLASHING.

3.3.5 ANALOG INPUT 1.861.752/753

COBUS: RX (2BRECEX)

ANAGAIN BYTE NO	SIG NAME	DESCRIPTION	MSB BITS	7	6	5	4	3	2	1	0
1 (21H)	ANAGAIN1	LINE INPUT LEVEL		M	B	B	B	B	B	B	L
2 (23H)	ANAGAIN2	EXAMPLE: 0dBm (=MIN)		0	0	0	1	1	0	1	0
		EXAMPLE: 6dBm		0	0	1	1	0	0	1	1
		MAX (=20dBm)		1	1	1	1	1	1	1	1

ADDRESS 21H VALID FOR CH1, 23H FOR CH2.

NOTE: DEFAULT VALUE = 6dBm.
NOTE: /MAINMUTE/ AND /EMPHASIS/ FED OVER DEDICATED LINES FROM GAINS CONTROL.

3.3.6
ANALOG OUTPUT 1.861.751.00

COBUS: RX (2BRECEX)

ANAGAIN BYTE NO	SIG NAME	DESCRIPTION	BITS	MSB 7	6	5	4	3	2	1	0
2 (2DH)	ANAGAIN4	LINE OUTPUT LEVEL		M	B	B	B	B	B	B	L
1 (2FH)	ANAGAIN3	EXAMPLE: 0dBm (=MIN)		0	0	0	1	1	0	1	0
		EXAMPLE: 6dBm		0	0	1	1	0	0	1	1
		MAX (=20dBm)		1	1	1	1	1	1	1	1

ADDRESS 2FH VALID FOR CH1, 2DH FOR CH2.

NOTE: DEFAULT VALUE = 6dBm.

NOTE: /MAINMUTE/ AND /EMPHASIS/ FED OVER DEDICATED LINES FROM GAINS CONTROL.

3.4 ELECTRONICS RACK 1.861.310.00

3.4.1 PDM CONTROL 1.861.813.00

COBUS: RX, TX (8BRECEX, 8BTRMEX)

THIS BOARD SUPPLIES

- PDM MODULATOR 1.861.811.00
- PDM DEMODULATOR 1.861.812.00
- ANALOG ROUTING 1.861.814.00
- CUE/PQ DELAY 1.861.816.00
- QUALITY DISPLAY 1.861.731.00
- MP AMPLIFIER 1.861.746.00

OVERVIEW OF ALL COMMANDS LISTED IN THIS SECTION:

POS	BITS	COMMAND	DESCRIPTION
1	1	IAN/PDM	PDM OR ANALOG SIGNAL ON TAPE
2	1	MON/STE	CUE TRACKS STEREO OR MONO (MIX)
3	1	CHASELB	CHANNEL SELECT BIT B
4	1	CHASELA	CHANNEL SELECT BIT A
5	1	MONSELB	MONITOR SELECT BIT B
6	1	MONSELA	MONITOR SELECT BIT A
7	1	EEPDM	EE LOOP PDM
8	1	MPSMUTE	MONITOR PANEL SPEAKER MUTING
9	1	PRESENT	PDM CONTROL PRESENT
10	8	CUE1GAIN	LINE LEVEL CUE 1, 0...20dBV.7
11	8	CUE2GAIN	LINE LEVEL CUE 2, 0...20dBV.7
12	8	QUALDISL	SIGNAL QUALITY DISPLAY DATA (PROCESSED), LEFT
13	8	QUALDISR	SIGNAL QUALITY DISPLAY DATA (PROCESSED), RIGHT
14	1	EMPHASIS	EMPHASIS TO PDM MODULATOR
15	1	HISPDPDM	AUX 3, 4: SELECT RESONATOR @ TS=1m/sec.
16	1	MON/STE1	AS MON/STE, BUT INVERTED IN AUX4MIX & INPUT

TX ONLY:

PRESENT BYTE NO	SIG NAME	DESCRIPTION	MSB BITS	7	6	5	4	3	2	1	0
1 (A0H)	PRESENT	PDM CONTROL PRESENT		X	X	X	X	X	X	X	0

RX:

MPSMUTE BYTE NO	SIG NAME	DESCRIPTION	BITS	7	6	5	4	3	2	1	0
2 (A3H)	MPSMUTE	MONITOR SPEAKER MUTED, SEE $$$		X	X	X	X	X	X	0	X

NOTE: THIS BIT IS SENT TO MP AMPLIFIER 1.861.746.00

NOTE $$$: MONITOR SPEAKER MUTING MODES:

1 POWER-UP
2 MAINMUTE
3 SPEAKER OFF/ON

DEFINITIONS OF AUTOMUTE, AUTOEDIT, AUTOINPUT A, B:

1 **AUTOMUTE:** (CUE OUTPUTS ONLY): CUE1GAIN AND CUE2GAIN SET TO 00H IN WIND MODE ONLY.

2 **AUTOEDIT:** (MONITOR SPEAKERS ONLY)

2.1 **ON:** IN PLAY, REC: MONSEL SET TO DIGITAL (PCM PLAYBACK). IN STOP, EDIT, WIND, TAPE DUMP: MONSEL SET TO CUE TRACKS. OVERRIDING BY KEYS ON PANELS IN ALL MODES POSSIBLE. STATUS RESTORED BY PRESSING STOP.

2.2 **OFF:** MONSEL SET TO CUE TRACKS IN ALL TAPE DECK MODES. OVERRIDING BY KEYS ON PANELS POSSIBLE. STATUS WILL NOT BE RESTORED.

3 **AUTOINPUT:** (DIGITALAUDIO OUTPUTS ONLY)

3.1 **A:** ALL CH TO INPUT IN STOP, WIND, LOC, ROLLBACK (CRAZCANA)

B: ALL READY CH TO INPUT IN STOP, WIND, LOC, ROLLBACK (CRAZAMER). IN AUTOINPUT A, AS WELL AS AUTOINPUT B, OVERRIDING IS POSSIBLE BY KEYS ON CHANNEL CONTROL PANEL (CCP) AND MONITOR PANEL (MP).

ANALOG ROUTING 1.861.814.00

MONSEL, CHASEL

BYTE NO	SIG NAME	DESCRIPTION	MSB BITS 7	6	5	4	3	2	B 1	A 0
1 (A1H)	MONSELA	MONITOR CONNECTED TO DIGITAL	X	X	X	X	X	X	0	0
	MONSELB	MONITOR CONNECTED TO CUE TRACKS	X	X	X	X	X	X	0	1
		MONITOR CONNECTED TO TC	X	X	X	X	X	X	1	0
	CHASELA	CHANNELS 1 + 2 ACTIVE	X	X	X	X	0	0	X	X
	CHASELB	CHANNEL 2 ACTIVE	X	X	X	X	0	1	X	X
		CHANNEL 1 ACTIVE	X	X	X	X	1	0	X	X

CUE1GAIN (MIX OR CH1)

BYTE NO	SIG NAME	DESCRIPTION	MSB BITS 7	6	5	4	3	2	1	0
3 (A5H)	CUE1GAIN	LINE OUTPUT LEVEL CUE1 MIN=AUTOMUTE	0	0	0	0	0	0	0	0
		EXAMPLE: 0dBm	0	0	0	1	1	0	1	0
		EXAMPLE: 6dBm	0	0	1	1	0	0	1	1
		MAX (=20dBm)	1	1	1	1	1	1	1	1

DEFAULT VALUE = 6dBm

CUE2GAIN (CH2 OR AUX3)

BYTE NO	SIG NAME	DESCRIPTION	MSB BITS 7	6	5	4	3	2	1	0
4 (A7H)	CUE2GAIN	LINE OUTPUT LEVEL CUE2 MIN=AUTOMUTE	0	0	0	0	0	0	0	0
		EXAMPLE: 0dBm	0	0	0	1	1	0	1	0
		EXAMPLE: 6dBm	0	0	1	1	0	0	1	1
		EXAMPLE: TTL LEVEL (5.0Vp)	0	0	0	1	0	1	1	0
		MAX (=20dBm)	1	1	1	1	1	1	1	1

DEFAULT VALUE = 6dBm OR TTL LEVEL.

NOTE: SEND TTL LEVEL, IF AUX4MIX=TRUE. OVERRIDING INHIBITED.

PDM MODULATOR 1.861.811.00

MON/STE, EMPHASIS

BYTE NO	SIG NAME	DESCRIPTION	MSB BITS 7	6	5	4	3	2	1	0
1 (A1H)	MON/STE	CUE TRACKS STEREO, ELSE MONO=MIX	X	X	X	1	X	X	X	X
	EMPHASIS	EMPHASIS ON	0	X	X	X	X	X	X	X

PDM DEMODULATOR 1.861.812.00

MON/STE, IAN/PDM, HISPDPDM

BYTE NO	SIG NAME	DESCRIPTION	BITS 7	6	5	4	3	2	1	0
1 (A1H)	IAN/PDM	PDM SIGNAL ON TAPE	X	X	1	X	X	X	X	X
	MON/STE	CUE TRACKS STEREO	X	X	X	1	X	X	X	X
	HISPDPDM	RESONATOR FOR TS>1m/sec. SELECTED	X	0	X	X	X	X	X	X

NOTE: HISPDPDM IS IN SYSCON-STATUS MEMORY 0580 (HI) AND 0581 (LO BYTE)

NOTE: IAN/PDM: NO AUTO MODE. TO BE SET MANUALLY.

EEPDM

BYTE NO	SIG NAME	DESCRIPTION	BITS	7	6	5	4	3	2	1	0
2 (A3H)	EEPDM	EE LOOP PDM ON		X	X	X	X	X	X	X	0
	MON/STE1	CUE TRACKS STEREO. AUX3 SPECIAL		X	X	X	X	X	*	X	X
		SEE TABLE BELOW FOR INPUT/REPRO CONF									

BYTE NO	SIG NAME	DESCRIPTION	BITS	7	6	5	4	3	2	1	0
6 (ABH)		NOT USED		M	B	B	B	B	B	B	L

TRANSLATION TABLE IAN/PDM, MON/STE, DEEMPHASIS FOR ANALOG **<<<HARDWARE**
MIX/CUE, PDM/ANA, AUTO SETTING <<<SOFTWARE
MIX DENOTES MON, CUE DENOTES STE
EEPDM <<<HARDWARE/SOFTWARE

		REPRO				INPUT			
		IAN		PDM		IAN		PDM	
PDM DEMODULATOR		MON	STE	MON	STE	MON	STE	MON	STE
IAN/PDM PDM=1	AUX3	0	0	0	1	1*	0	1*	1
	AUX4	0	0	1	1	0	0	1	1
DEEMPHASIS ON=1	AUX3	0	1	0	X	0	1	0	X
	AUX4	1	1	X	X	1	1	X	X

NOTE: SIGNAL MON/STE1 FOR DEMODULATOR ONLY INVERSE TO MON/STE IN CONFIGURATIONS DENOTED WITH ASTERSISK (*) {AUX4MIX & INPUT & CUE MODE ONLY}

CUE/PQ DELAY 1.861.816.00

MON/STE

BYTE NO	SIG NAME	DESCRIPTION	BITS	7	6	5	4	3	2	1	0
1 (A1H)	MON/STE	CUE TRACKS STEREO, ELSE MONO=MIX		X	X	X	1	X	X	X	X

QUALITY DISPLAY 1.861.731.00

QUALDISL

BYTE NO	SIG NAME	DESCRIPTION	BITS (MSB)	7	6	5	4	3	2	1	0
5 (A9H)	QUALDISL	SIG QUAL CH1 (GRN) QP1 CORRECTION		0	0	0	0	0	0	0	1
		SIG QUAL CH1 (GRN) QP2 CORRECTION		0	0	0	0	0	0	1	0
		SIG QUAL CH1 (GRN) FINGERPRINT		0	0	0	0	0	1	0	0
		SIG QUAL CH1 (GRN) TRACKLOSS		0	0	0	0	1	0	0	0
		SIG QUAL CH1 (YEL) INTERPOLATION 2		0	0	0	1	0	0	0	0
		SIG QUAL CH1 (YEL) INTERPOLATION 1		0	0	1	0	0	0	0	0
		SIG QUAL CH1 (RED) MUTE		0	1	0	0	0	0	0	0
		SIG QUAL CH1 (RED) NO DATA		1	0	0	0	0	0	0	0

QUALDISR

BYTE NO	SIG NAME	DESCRIPTION	BITS (MSB)	7	6	5	4	3	2	1	0
7 (ADH)	QUALDISR	SIG QUAL CH2 (GRN) QP1 CORRECTION		0	0	0	0	0	0	0	1
		SIG QUAL CH2 (GRN) QP2 CORRECTION		0	0	0	0	0	0	1	0
		SIG QUAL CH2 (GRN) FINGERPRINT		0	0	0	0	0	1	0	0
		SIG QUAL CH2 (GRN) TRACKLOSS		0	0	0	0	1	0	0	0
		SIG QUAL CH2 (YEL) INTERPOLATION 2		0	0	0	1	0	0	0	0
		SIG QUAL CH2 (YEL) INTERPOLATION 1		0	0	1	0	0	0	0	0
		SIG QUAL CH2 (RED) MUTE		0	1	0	0	0	0	0	0
		SIG QUAL CH2 (RED) NO DATA		1	0	0	0	0	0	0	0

	QUALDISL (A9H)								QUALDISR (ADH)							
ADDR.:	80	40	20	10	08	04	02	01	01	02	04	08	10	20	40	80

NOTE: FOR THE COMPOSITION OF SQ-DATA SEE PAR. 3.2, CODEC CONTROL.

3.5
CHANNEL CONTROL PANEL 1.861.370.00

COBUS: RX, TX (8BRECEX, 8BTRMEX)

COBUS ELECTRONICS LOCATED ON CCP TRANSCEIVER 1.861.744.00 WHICH FEEDS CCP KEYBOARD 1.861.743.00

OVERVIEW OF ALL COMMANDS LISTED IN THIS SECTION:

POS	BITS	COMMAND	DESCRIPTION
1	1	SAFECH1	KEY SAFE CH 1
2	1	SAFECH2	KEY SAFE CH 2
3	1	SAFETC	KEY SAFE TC
4	1	SAFEAUX	KEY SAFE AUX
5	1	READYCH1	KEY READY CH 1
6	1	READYCH2	KEY READY CH 2
7	1	READYTC	KEY READY TC
8	1	READYAUX	KEY READY AUX
9	1	CH1INPUT	KEY CH 1 TO INPUT
10	1	CH1SYNC	KEY CH 1 TO SYNC
11	1	CH1REPRO	KEY CH 1 TO REPRODUCE
12	1	CH2INPUT	KEY CH 2 TO INPUT
13	1	CH2SYNC	KEY CH 2 TO SYNC
14	1	CH2REPRO	KEY CH 2 TO REPRODUCE
15	1	PRESENT	CCP PRESENT
16	1	TCINPUT	KEY TC TO INPUT
17	1	TCSYNC	KEY TC TO SYNC
18	1	TCREPRO	KEY TC TO REPRODUCE
19	1	AUXINPUT	KEY AUX 3 TO INPUT IF IN MIX MODE
20	1	AUXSYNC	KEY AUX 3 TO SYNC IF IN MIX MODE
21	1	AUXREPRO	KEY AUX 3 TO REPRO IF IN MIX MODE
22	1	BULSAFE1	LED SAFE CH 1
23	1	BULSAFE2	LED SAFE CH 2
24	1	BULSAFTC	LED SAFE TC
25	1	BULSAAUX	LED SAFE AUX
26	1	BULRDY1	LED READY CH 1
27	1	BULRDY2	LED READY CH 2
28	1	BULRDYTC	LED READY TC
29	1	BULRYAUX	LED READY AUX
30	1	BUL1INPT	LED CH 1 TO INPUT
31	1	BUL1SYNC	LED CH 1 TO SYNC
32	1	BUL1RPRO	LED CH 1 TO REPRODUCE
33	1	BUL1REC	LED CH 1 TO RECORD
34	1	BUL2INPT	LED CH 2 TO INPUT
35	1	BUL2SYNC	LED CH 2 TO SYNC
36	1	BUL2RPRO	LED CH 2 TO REPRODUCE
37	1	BUL2REC	LED CH 2 TO RECORD
38	1	BULTCIN	LED TC TO INPUT
39	1	BULTCSYC	LED TC TO SYNC
40	1	BULTCREP	LED TC TO REPRODUCE
41	1	BULTCREC	LED TC TO RECORD
42	1	BULAUXIN	LED AUX 3 TO INPUT
43	1	BULAUXSY	LED AUX 3 TO SYNC
44	1	BULAUXRP	LED AUX 3 TO REPRODUCE
45	1	BULAUXRC	LED AUX 3 TO RECORD

TX ONLY:

BYTE NO	SIG NAME	DESCRIPTION	BITS	7	6	5	4	3	2	1	0
1 (C0H)	SAFECH1	KEY SAFE CH 1 ON		X	X	X	X	X	X	X	1
	SAFECH2	KEY SAFE CH 2 ON		X	X	X	X	X	X	1	X
	SAFETC	KEY SAFE TC ON		X	X	X	X	X	1	X	X
	SAFEAUX	KEY SAFE AUX ON		X	X	X	X	1	X	X	X
	READYCH1	KEY READY CH 1 ON		X	X	X	1	X	X	X	X
	READYCH2	KEY READY CH 2 ON		X	X	1	X	X	X	X	X
	READYTC	KEY READY TC ON		X	1	X	X	X	X	X	X
	READYAUX	KEY READY AUX ON		1	X	X	X	X	X	X	X

BYTE NO	SIG NAME	DESCRIPTION	BITS	7	6	5	4	3	2	1	0
2 (C2H)	CH1INPUT	KEY CH 1 TO INPUT ON		X	X	X	X	X	X	X	1
	CH1SYNC	KEY CH 1 TO SYNC ON		X	X	X	X	X	X	1	X
	CH1REPRO	KEY CH 1 TO REPRO ON		X	X	X	X	X	1	X	X
	CH2INPUT	KEY CH 2 TO INPUT ON		X	X	X	1	X	X	X	X
	CH2SYNC	KEY CH 2 TO SYNC ON		X	X	1	X	X	X	X	X
	CH2REPRO	KEY CH 2 TO REPRO ON		X	1	X	X	X	X	X	X
	PRESENT	CCP PRESENT		0	X	X	X	X	X	X	X

BYTE NO	SIG NAME	DESCRIPTION	BITS	7	6	5	4	3	2	1	0
3 (C4H)	TCINPUT	KEY TC TO INPUT ON		X	X	X	X	X	X	X	1
	TCSYNC	KEY TC TO SYNC ON		X	X	X	X	X	X	1	X
	TCREPRO	KEY TO REPRO ON		X	X	X	X	X	1	X	X
	AUXINPUT	KEY AUX 3 TO INPUT ON		X	X	X	1	X	X	X	X
	AUXSYNC	KEY AUX 3 TO SYNC ON		X	X	1	X	X	X	X	X
	AUXREPRO	KEY AUX 3 TO REPRO ON		X	1	X	X	X	X	X	X

RX:

BYTE NO	SIG NAME	DESCRIPTION	BITS	7	6	5	4	3	2	1	0
1 (C1H)	BULSAFE1	LED SAFE CH 1 ON		X	X	X	X	X	X	X	1
	BULSAFE2	LED SAFE CH 2 ON		X	X	X	X	X	X	1	X
	BULSAFTC	LED SAFE TC ON		X	X	X	X	X	1	X	X
	BULSAAUX	LED SAFE AUX ON		X	X	X	X	1	X	X	X
	BULRDT1	LED READY CH 1 ON		X	X	X	1	X	X	X	X
	BULRDY2	LED READY CH 2 ON		X	X	1	X	X	X	X	X
	BULRDYTC	LED READY TC ON		X	1	X	X	X	X	X	X
	BULRYAUX	LED READY AUX ON		1	X	X	X	X	X	X	X

BYTE NO	SIG NAME	DESCRIPTION	BITS	7	6	5	4	3	2	1	0
2 (C3H)	BUL1INPT	LED CH 1 TO INPUT ON		X	X	X	X	X	X	X	1
	BUL1SYNC	LED CH 1 TO SYNC ON		X	X	X	X	X	X	1	X
	BUL1RPRO	LED CH 1 TO REPRO ON		X	X	X	X	X	1	X	X
	BUL1REC	LED CH 1 TO RECORD ON		X	X	X	X	1	X	X	X
	BUL2INPT	LED CH 2 TO INPUT ON		X	X	X	1	X	X	X	X
	BUL2SYNC	LED CH 2 TO SYNC ON		X	X	1	X	X	X	X	X
	BUL2RPRO	LED CH 2 TO REPRO ON		X	1	X	X	X	X	X	X
	BUL2REC	LED CH 2 TO RECORD ON		1	X	X	X	X	X	X	X

BYTE NO	SIG NAME	DESCRIPTION	BITS	7	6	5	4	3	2	1	0
3 (C5H)	BULTCIN	LED TC TO INPUT ON		X	X	X	X	X	X	X	1
	BULTCSYC	LED TC TO SYNC ON		X	X	X	X	X	X	1	X
	BULTCREP	LED TO REPRO ON		X	X	X	X	X	1	X	X
	BULTCREC	LED TO RECORD ON		X	X	X	X	1	X	X	X
	BULAUXIN	LED AUX 3 TO INPUT ON		X	X	X	1	X	X	X	X
	BULAUXSY	LED AUX 3 TO SYNC ON		X	X	1	X	X	X	X	X
	BULAUXRP	LED AUX 3 TO REPRO ON		X	1	X	X	X	X	X	X
	BULAUXRC	LED AUX 3 TO RECORD ON		1	X	X	X	X	X	X	X

SAFE/READY CONCEPT:

A) RECORD MODE

KEY RECORD AND LED RECORD ILLUMINATED.
QUIT WITH SAFE KEY. IF NO CHANNEL IN RECORD ANYMORE: RECORD KEY NOT ILLUMINATED. SAFE KEY ILLUMINATED WHEN ACTIVATED. READY KEY DISABLED.

RECORD AGAIN WITH SAFE ACTIVATED: IF NO CHANNEL IN READY, RECORD KEY NOT ILLUMINATED. ALWAYS: CHANNELS SET IN SAFE STATUS ARE PROTECTED FROM OVERWRITING. READY KEY ENABLED.

PREPARING FOR RECORD: ACTIVATE READY KEY. KEY WILL TURN ON. WHEN RECORD ADDITIONALLY PRESSED: LED RECORD TURNS ON AND READY IS NOT ILLUMINATED ANYMORE (NOTE: IF THE RECORDER IS ALREADY IN RECORD, PRESSING READY ALONE IS NOT SUFFICIENT, RECORD MUST BE ACTIVATED ADDITIONALLY).

B) REPRODUCE MODE

SAFE AND READY KEYS ENABLED. KEY AND LED'S RECORD WILL NEVER TURN ON. APPROPRIATE SAFE/READY STATUS DISPLAYED.

C) LED COLOR ASSIGNMENT

RECORD : RED
SAFE : YEL
READY : GRN

D) S/R FUNCTIONS IN MENU

FUNCTIONALLY TREATED IN THE SAME MANNER AS DESCRIBED ABOVE. INDICATION ONLY IF KEYS WITH LED HAVE BEEN ASSIGNED. RECORD MODE INDICATION WITH RECORD KEY ONLY. NO OTHER COLORS THAN YELLOW FOR LED AVAILABLE.

3.6
MONITOR PANEL 1.861.365.00

COBUS: RX, TX (2BRECTRM)

COBUS LOCATED ON MP AMPLIFIER 1.861.746.00 WHICH FEEDS MP KEYBOARD 1.861.745.00

OVERVIEW OF ALL COMMANDS LISTED IN THIS SECTION:

POS	BITS	COMMAND	DESCRIPTION
1	1	KINTAP	KEY INPUT/TAPE
2	1	KMPCH1	KEY CH 1 (REPRODUCE DIGITAL TRACK)
3	1	KMPCH2	KEY CH 2 (REPRODUCE DIGITAL TRACK)
4	1	KMPTC	KEY TC
5	1	KMPCUE1	KEY CUE 1 OR MIX
6	1	KMPCUE2	KEY CUE 2 OR AUX 3
7	1	PRESENT	MP PRESENT
8	1	BMPINP	LED INPUT
9	1	BMPTAP	LED TAPE
10	1	BMPCH1	LED CH 1
11	1	BMPCH2	LED CH 2
12	1	BMPCUE1	LED CUE 1
13	1	BMPMIX	LED MIX
14	1	BMPCUE2	LED CUE 2
15	1	BMPAUX	LED AUX 3

TX ONLY:

BYTE NO	SIG NAME	DESCRIPTION	BITS (MSB) 7	6	5	4	3	2	1	0
1 (D0)	KINTAP	KEY INPUT/TAPE TO INPUT ACTIVE	X	X	X	X	X	X	X	1
	KMPCH1	KEY CH 1 ACTIVE	X	X	X	X	X	X	1	X
	KMPCH2	KEY CH 2 ACTIVE	X	X	X	X	X	1	X	X
	KMPTC	KEY TC ACTIVE	X	X	X	1	X	X	X	X
	KMPCUE1	KEY CUE 1 OR MIX ACTIVE	X	X	1	X	X	X	X	X
	KMPCUE2	KEY CUE 2 OR AUX 3 ACTIVE	X	1	X	X	X	X	X	X
	PRESENT	MP PRESENT	0	X	X	X	X	X	X	X

RX:

BYTE NO	SIG NAME	DESCRIPTION	BITS 7	6	5	4	3	2	1	0
1 (D1)	BMPINP	LED INPUT ON	X	X	X	X	X	X	X	0
	BMPTAP	LED TAPE ON	X	X	X	X	X	X	0	X
	BMPCH1	LED CH 1 ON	X	X	X	X	X	0	X	X
	BMPCH2	LED CH 2 ON	X	X	X	X	0	X	X	X
	BMPCUE1	LED CUE 1 ON	X	X	X	0	X	X	X	X
	BMPMIX	LED MIX ON	X	X	0	X	X	X	X	X
	BMPCUE2	LED CUE 2 ON	X	0	X	X	X	X	X	X
	BMPAUX	LED AUX 3 ON	0	X	X	X	X	X	X	X

NOTE: COMMAND /MPSMUTE/ IS FED OVER DEDICATED LINE TO MP AMPLIFIER. FOR MONITOR SPEAKER MUTING MODES SEE PAR. 1.1.

OPERATIONAL DESCRIPTION OF FADER START A..D

General note: In the description below the local and remote keyboards are mentioned. This concerns all keys on the tape deck and the transport keys on the remotes. All these keys may be disabled with the exceptions mentioned below.

When fader start is activated, all transport error modes, unload, power down and tape out commands are enabled, ensuring smooth tape handling in every case.

Only one fader type may be enabled. If an attempt is made to change the type from the keyboard or from one of the remotes, the new setting and function will be active and the old setting and function will be released.

The fader functions (FADER A...D) are independent on the remote settings NO REMOTE, REMOTE A or REMOTE B.

1. FADER START A

In this version, the recorder contains no "fader start ready" key.
As soon as the fader connectors FAD1/FAD2 are activated, the recorder is in PLAY mode and the local and remote keyboards are disabled with the exception of key EMPHASIS and the CURSOR keys. The tape deck monitor and the monitor panel are muted. The phone connector will still be active.
When the fader connectors FAD1/FAD2 are desactivated, STOP mode is initialized and the tape deck monitor and the monitor panel are demuted as soon as STOP is achieved (not before!). Otherwise normal operation is established.
Tape out/unload/td error/power down: FAD1/2 desactivated. When after tape out/unload/td error/power down the key PLAY is pressed and the fader connectors FAD1/2 are activated, the recorder establishes normal play mode (monitor panel demuted). When now the fader connectors FAD1/2 are desactivated, normal play mode continues. After the fader connectors FAD1/2 are activated again, normal fader operation is established as described in this paragraph.

RECORD mode: FAD1/2 connector is ignored.

TAPE DUMP A...D: FAD1/2 connector ignored.

2. FADER START B

In this version an internal and/or external "fader start ready" key is present.
When key "fader start ready" is not closed (signal SR-FADRY not present), any activation of the fader connectors FAD1/FAD2 is ignored. The local and remote keyboards remain activated, independent on the state of the fader connectors FAD1/FAD2. Normal operation.
When key "fader start ready" is closed (signal SR-FADRY present) and the fader connectors FAD1/FAD2 are activated, the recorder is in PLAY mode and the local and remote keyboards are disabled with the exception of key EMPHASIS and the CURSOR keys. The tape deck monitor and the monitor panel are muted. The phone connector will still be active.
When the fader connectors FAD1/FAD2 are desactivated, STOP mode is initialized and the tape deck monitor and the monitor panel are demuted as soon as STOP is achieved (not before!). Otherwise normal operation is established. The fader functions are enabled dependent on the state of the "fader start ready" key.
Tape out/unload/td error/power down: FAD1/2 desactivated. The "fader start ready" key is still active. When after tape out/unload/td error/power down the key PLAY is pressed and the fader connectors FAD1/2 are activated, the recorder establishes normal play mode (monitor panel demuted). When now the fader connectors FAD1/2 are desactivated, normal play mode continues. After the fader connectors FAD1/2 are activated again, the normal fader operation is established as described in this paragraph.

RECORD mode: FAD1/2 connector is ignored.

TAPE DUMP A...D: FAD1/2 connector ignored.

3. FADER START C

In this version an internal and/or external "fader start ready" key is present.
When key "fader start ready" is not closed (signal SR-FADRY not present), any activation of the fader connectors FAD1/FAD2 is ignored. The local and remote keyboards remain activated, independent on the state of the fader connectors FAD1/FAD2. Normal operation.
When key ""fader start ready" is closed (signal SR-FADRY present), the local and remote keyboards are disabled, with the exception of key EMPHASIS, the CURSOR keys and the "fader start ready" key.
When key "fader start ready" is closed (signal SR-FADRY present) and the fader connectors FAD1/FAD2 are activated, the recorder is in PLAY mode and the local and remote keyboards remain disabled with the exception of key EMPHASIS and the CURSOR keys. The tape deck monitor and the monitor panel are muted. The phone connector will still be active.

When the fader connectors FAD1/FAD2 are desactivated, STOP mode is initialized and the tape deck monitor and the monitor panel are demuted as soon as STOP is achieved (not before!). The fader functions are enabled dependent on the state of the "fader start ready" key. Local and remote keyboards remain desactivated (except key EMPHASIS and the CURSOR keys) until key "fader start ready" is released.
Not before key "fader start ready" is disabled will the recorder establish normal operation again.
Tape out/unload/td error/power down: FAD1/2 desactivated. The "fader start ready" key is inactive. When after tape out/unload/td error/power down the key PLAY is pressed and the fader connectors FAD1/2 are activated, the recorder establishes normal play mode (monitor panel demuted). When now the fader connectors FAD1/2 are desactivated, normal play mode continues. After the fader connectors FAD1/2 are activated again, the normal fader operation is established as described in this paragraph.

RECORD mode: FAD1/2 connector is ignored.

TAPE DUMP A...D: impossible, when key "fader start ready" is active. The key "fader start ready" is ignored, when the recorder is in mode TAPE DUMP A...D.

4. FADER START D (Finnland)

In this version an internal and/or external "fader start ready" key is present.
When key "fader start ready" is not closed (signal SR-FADRY not present), any activation of the fader connectors FAD1/FAD2 is ignored. The local and remote keyboards remain activated, independent on the state of the fader connectors FAD1/FAD2. Normal operation.
When key ""fader start ready" is closed (signal SR-FADRY present), the local and remote keyboards remain enabled. All transport functions remain enabled (error modes!).
When key "fader start ready" is closed (signal SR-FADRY present) and the fader connectors FAD1/FAD2 are activated, the recorder is in PLAY mode and the local and remote keyboards remain enabled. The tape deck monitor and the monitor panel are muted. The phone connector will still be active.
To exit from this mode: press any transport key. All commands from the tape deck (tape out, errors, etc.) are enabled. Then the tape deck monitor and the monitor panel are demuted. When the fader connectors FAD1/FAD2 are desactivated, STOP mode is initialized and the tape deck monitor and the monitor panel are demuted as soon as STOP is achieved (not before!), unless any transport key or tape deck command has been activated before. The condition for demuting therefore is: any transport key pressed or STOP achieved. If any transport key or tape deck command has been activated before the FAD1/FAD2 signal is removed, the FAD1/FAD2 command is ignored. Normal operation is established.
Tape out/unload/td error/power down: FAD1/2 desactivated. The "fader start ready" key is still active. When after tape out/unload/td error/power down the key PLAY is pressed and the fader connectors FAD1/2 are activated, the recorder establishes normal play mode (monitor panel demuted). When now the fader connectors FAD1/2 are desactivated, normal play mode continues. After the fader connectors FAD1/2 are activated again, the normal fader operation is established as described in this paragraph.

RECORD mode: FAD1/2 connector is ignored.

TAPE DUMP A...D: FAD1/2 connector ignored.

DEVICE AND SUBDEVICE ADDRESSES FOR SYSCOM RECEIVERS AND TRANSMITTERS

FORMATTING SYSCON ADDRESSES:

1. NORMAL FORMAT

AAAA SSSI DDDDDDDD
* * * * * * *

A = DEVICE ADDRESS (0 IS NOT PERMITTED)
S = SUBDEVICE ADDRESS
D = DATA BYTE
I = LO, IF TX; HI, IF RX (RELATED TO HARDWARE)
* = SYSCON ADDRESS

2. DIGITAL GAINS (SEE PAGE 8)

AAAA SSSI GGGGGGGG
AAAA TTTI DDDDDDDD

G = GAIN ADRESS (SEE LIST GAINS CONTROL), ADDRESSES GAIN BLOCK
T = (SUBDEVICE ADDRESS + 1)

DETECTOR 1.861.804.00

8BRECEX, 8BTRMEX

BYTE NO	RECEIVER DEVICE ADDR	SUBDEV. ADDR	TRANSMITTER SUBDEV.ADDR	DESCRIPTION
1	0001	0001		SAFEAUX1...4, SAFECH1+2 MASSA
1	0001		0000	TDMON1...5, PRESENT
2	0001	0011		RECCUR
-	0001	0101		NOT USED
3	0001	0111		EELOOP1, TDSMUTE, LOSPD, HISPD

NOTE: RX ADDRESSES >7H ARE NOT PERMITTED DUE TO HARDWARE DESIGN!
NOTE: TX ADDRESS 0H ONLY DUE TO HARDWARE DESIGN!

ANALOG INPUT 1.861.752.00

2BRECEX

BYTE NO	RECEIVER DEVICE ADDR	SUBDEV. ADDR	TRANSMITTER SUBDEV.ADDR	DESCRIPTION
1	0010	0001		ANAGAIN1
2	0010	0011		ANAGAIN2

ANALOG OUTPUT 1.861.751.00

2BRECEX

BYTE NO	RECEIVER DEVICE ADDR	SUBDEV. ADDR	TRANSMITTER SUBDEV.ADDR	DESCRIPTION
1	0010	1101		ANAGAIN4
2	0010	1111		ANAGAIN3

DISPLAY PANEL 1.861.555.00

8BTRMEX, RX VIA PROM

BYTE NO	RECEIVER DEVICE ADDR	SUBDEV. ADDR	TRANSMITTER SUBDEV.ADDR	DESCRIPTION
1	0110		1100	KEYSTAT1
1	0011	0001		TIMEINF1
2	0110		1010	KEYSTAT2, PRESENT
2	0011	0011		TIMEINF2
3	0011	0101		TIMEINF3
4	0011	0111		TIMEINF4
5	0011	1001		TIMEINF5
6	0100	0001		TIMEINF6
7	0100	0011		TIMEINF7
8	0100	0101		TIMEINF8
9	0100	0111		TIMEINF9
10	0100	1001		TIMEINF0
11	0100	1011		DPGAINL
12	0100	1101		DPGAINR
13	0110	0001		DPLVLCH1
14	0110	0011		DPLVLCH2
15	0110	0101		DPCLIPP1,2
16	0110	0111		QUALDISL
17	0110	1001		QUALDISR
18	0110	1011		BULBSTAT1
19	0110	1101		BULBSTAT2

GAINS CONTROL 1.861.853.00

8BTRMEX, 8BRECEX

BYTE NO	RECEIVER DEVICE ADDR	SUBDEV. ADDR	TRANSMITTER SUBDEV.ADDR	DESCRIPTION
1	0101	0001		DDEMPH
1	0101		0000	DPLVLCH1
2	0101	0011		PREVIEW, ADCAES,EELOOP5, HPFILOFF,REPMUTE1/2, MAINMUTE,DAPROSYN
2	0101		0010	DPLVLCH2
3	0101	0101		DISREPRO,EMPHASIS,PUNCH
3	0101		0100	DPCLIPP, PRESENT
4	0101	0111		DPGNADRD(0,1,2,10,11,12)
4	0101		0110	QUALITY
5	0101	1001		DPDIGGN
5	0101		1000	DIEMPH

CODEC CONTROL 1.861.857.00

RECTRMEX (2BYTES)

BYTE NO	RECEIVER DEVICE ADDR	SUBDEV. ADDR	TRANSMITTER SUBDEV.ADDR	DESCRIPTION
1	0111	0001		R/W/CRC ERRORS,REPRO, EELOOP3,SQ-DISPLAY
1	0111		0000	SQ-DISPLAY DATA,CRC ERRORS

TIMING AND TEST 1.861.862.00

8BTRMEX, 8BRECEX

BYTE NO	RECEIVER DEVICE ADDR	SUBDEV. ADDR	TRANSMITTER SUBDEV.ADDR	DESCRIPTION
1	1000	0001		MCVASP1
			0000	EMPHASXF,PRESENT,TTERROR, FSSET,TTLOCK,RANGEOK
2	1000	0011		MCVASP2
3	1000	0101		MCCONW1
4	1000	0111		MCCONW2,RECORD,EELOOP2, EMPHASIS,RTSYNC,PAR/INDI

RT/TC CODEC 1.861.861.00

8BTRMEX, BYTE NO	8BRECEX RECEIVER DEVICE ADDR	SUBDEV. ADDR	TRANSMITTER SUBDEV.ADDR	DESCRIPTION
1	1001		1110	TXRTCRC
1	1001	0001		FLAG, SAMPFREQ, AUXTRKFO
2	1001		0000	RTADDR0
2	1001	0011		AUXTRKFO, RESERVED
3	1001		0010	RTADDR1
3	1001	0101		RTATOCO1
4	1001		0100	RTADDR2
4	1001	0111		RTATOCO2
5	1001		0110	RTADDR3
5	1001	1001		RTATOCO3
6	1001		1000	RTADDR4
6	1001	1011		RTATOCO4
7	1001		1010	RTADDR5
1	1011		0000	TCREADY
1	1011	0001		FRAMERA, VARILO, TAPETYPE,
1				SYSCFS
2	1011		0010	TCADDR
3	1011		0100	PRESENT, TCREAD

PDM CONTROL 1.861.813.00

8BRECEX, BYTE NO	8BTRMEX RECEIVER DEVICE ADDR	SUBDEV. ADDR	TRANSMITTER SUBDEV.ADDR	DESCRIPTION
1	1010	0001		MONSEL, CHASEL, MON/STE,
				EMPHASIS, AN/PDM
1	1010		0000	PRESENT
2	1010	0011		MPSMUTE, EEPDM, MPSMUTE
3	1010	0101		CUE1GAIN
4	1010	0111		CUE2GAIN
5	1010	1001		QUALDISL
6	1010	1011		NOT USED
7	1010	1101		QUALDISR

CHANNEL CONTROL PANEL 1.861.370.00

8BTRMEX, BYTE NO	8BRECEX RECEIVER DEVICE ADDR	SUBDEV. ADDR	TRANSMITTER SUBDEV.ADDR	DESCRIPTION
1	1100	0001		BULSAFE, BULSAAUX, BULRDT,
				BULRDYTC, BULRYAUX
1	1100		0000	SAFECH, SAFETC, SAFEAUX,
				READYCH, READYTC, READYAUX
2	1100	0011		BULINPT, BULSYNC, BULREPRO
2	1100		0010	CHINPUT, CHSYNC, CHREPRO,
				PRESENT
3	1100	0101		BULTCIN, BULTCSYNC,
				BULTCREP, BULTCREC,
				BULAUXIN, BULAUXSY,
				BULAUXRP, BULAUXRC
3	1100		0100	TCINPUT, TCSYNC, TCREPRO,
				AUXINPUT, AUXSYNC, AUXREPRO

MONITOR PANEL 1.861.365.00

2BRECTRM BYTE NO	RECEIVER DEVICE ADDR	SUBDEV. ADDR	TRANSMITTER SUBDEV.ADDR	DESCRIPTION
1	1101	0001		BMPINP, BMPTAP, BMPCH,
				BMPCUE, BMPMIX, BMPAUX
1	1101		0000	KINTAP, KMPCH, KMPTC,
				KMPCUE, PRESENT

OVERWIEW OF DEVICE ADDRESS ASSIGNMENT:

0H	NOT PERMITTED
1H	DETECTOR (CAGE)
2H	ANALOG INPUT, ANALOG OUTPUT
3H	DISPLAY PANEL, RX BYTES 1...10 (TIMEINF)
4H	DISPLAY PANEL, RX BYTES 11, 12
5H	GAINS CONTROL
6H	DISPLAY PANEL, TX BYTES 1, 2; RX BYTES 13...19
7H	CODEC CONTROL
8H	TIMING + TEST
9H	RT (RT/TC CODEC)
AH	PDM CONTROL
BH	TC (RT/TC CODEC)
CH	CHANNEL CONTROL PANEL
DH	MONITOR PANEL
EH	REMOTE DISPLAY PANEL, TX BYTES 1, 2
FH	NOT USED

DEFINITION OF STANDARD DIAGNOSTIC SCREENS

SCREEN 1: SHOW STATUS SHOWS ALL AUDIO "TOGGLE" SWITCH STATUS INFO, SIGNAL QUALITY, TIME INFO, ERROR FLAGS

SCREEN 2: SHOW GAINS SHOWS ANALOG AND DIGITAL GAIN SETS (CALIBRATED, UNCALIBRATED, HEADROOM)

SCREEN 3: SHOW QUALITY SHOWS ACCUMULATED SIGNAL QUALITY INFO TOGETHER WITH LAP TIME, PLUS ACCUMULATED TRACK SELECTIVE CRC ERROR COUNTERS (DISPLAY OF ONE TRACK ONLY!).

SCREEN 4: SHOW REFERENCE TIME SHOWS ACTUAL REFERENCE TIME CONTROL WORD INFO AND BYTE 00 DI/DO INFO

RT INFO: xxxx xxxx xxxx xxxx (BINARY DATA)
DI INFO: yyyy yyyy (BINARY DATA) DO INFO: zzzz zzzz (BINARY DATA)

```
TWIN FLAG              : ON/OFF
SAMPLING FREQUENCY     : 48/44.1/32/44.056 kHz
DASH FORMAT VERSION    : S/M/F/X
TC TRACK               : MODULATED/UNMODULATED
AUX3 TRACK             : CUE/DATA
CUE TRACK(S)           : MODULATED/UNMODULATED
```

CANNEL STATUS DATA	DI	DO
USER	CONSUMER/PROFESSIONAL	CONSUMER/PROFESSIONAL
APPLICATION	AUDIO/NON-AUDIO	AUDIO/NON-AUDIO
SAMPLING FREQUENCY	LOCKED/UNLOCKED	LOCKED/UNLOCKED
EMPHASIS TYPE	CD/CCITT/UNSPECIFIED	CD/CCITT/UNSPECIFIED
SAMPLING FREQUENCY	48/44.1/32 kHz/UNSPEC.	48/44.1/32 kHz/UNSPEC.

SCREEN 5: HELP SHOWS SYSCON COMMANDS ACCORDING TO THE SYSCON MONITOR LIST.

REMARK ON TERMINAL DISPLAYS WITH OPTIONAL FLOPPY:

FORMATTING: 25 LINES, 80 CHARACTERS PER LINE.

DISPLAY TYPES:

USER DISPLAYS	SERVICE DISPLAYS (*)
UA) HELP MENU	SA) STATUS
UB) DIAGNOSTICS	SB) COMMANDS
UC) LEVELS	SC) DEBUGGING MODE

NOTE (*): ACCESS WITH PASSWORD ONLY

USER DISPLAYS:

EXAMPLE: B) DIAGNOSTIC DISPLAYS:
PICTURE 1: CHECKLIST
- PRESENT BITS
- COMMUNICATION TO MASTER
- T+T-CHECK
- RECORD CURRENT
- TTLOCK
- RANGEOK
- AESLOCK
- SAFE/READY STATUS
- INPUT/REPRO
- TEST
- MAINMUTE, REPMUTE, CUEMUTE
- FSSET

- VARISPEED + DEVIATION
- EXTERNAL SYNC MODE
- POWER SUPPLY SYNC
- SERVO REFERENCE
- AUDIO MONITOR MODE (CHASEL, MONSEL)
- TAPETYPE

PICTURE 2: EE-LOOPS WITH SQ-DISPLAY
- DISPLAY EE-LOOPS (0...5, INPUT) TOGETHER WITH SQ-DISPLAY
- CONVENIENT SETTING PROCEDURE FOR EE-LOOPS (0...5, INPUT, EETC, EEPDM, EERT)

PICTURE 3: ERROR CORRECTION
- APPLY WRITE ERRORS (CONVENIENT DISPLAY)
- DISPLAY ALL ERRORS

PICTURE 4: TAPE ERRORS
- DISPLAY SPLICE, INTERPOLATIONS, CRC, ETC.
- TOGETHER WITH TAPE TIME
- HISTOGRAM OF ERRORS (TO BE SELECTED) TOGETHER WITH TIME

SIMULATION AND DISPLAY OF ERRORS ON TERMINALS

>>>>>>>>>>>>>>>>>>>>>>>>>SPLICE<<<<<<<<<<<<<<<<<<<<<<<<<<<<<<<<<<<<<<<<<<<<

TX FROM SYSCON - LOOP COMMANDS:

DEFINE LOOP:	THROUGH (DEFAULT)	FF
	EELOOP4 (BEFORE CODEC)	BF
	EELOOP3 (AFTER CODEC)	7F + MENU
	NOERROR (NO ERROR)	7F

TX FROM SYSCON - ERROR MENU:

DEFINE TYPE OF ERROR:	A LOW ERROR RATE	
	B FIRST PASS P CORRECTION	
	C SECND PASS P CORRECTION	
	D INTERPOLATION	
	E SPLICE	
	F TRACKLOSS	
	G MUTE	
	H NO DATA	
		TX:
SPECIFY PARAMETERS:	A (NO SPECS)	7F
	B CH 1	52
	B CH 2	51
	B CH 1+2	50
	C CH 1	4B
	C CH 2	43
	D CH 1 TYPE 1	4C
	D CH 1 TYPE 2	4D
	D CH 1 TYPE 3	4E
	D CH 2 TYPE 1	44
	D CH 2 TYPE 2	45
	D CH 2 TYPE 3	46
	E SHORT BURST CH 1	5A
	E SHORT BURST CH 2	59
	E SHORT BURST CH 1+2	58
	E LONG BURST CH 1	5E
	E LONG BURST CH 2	5D
	E LONG BURST CH 1+2	5C
	F ONE TRACK WRITE CH 1	56
	F ONE TRACK WRITE CH 2	55
	F ONE TRACK WRITE CH 1+2	54
	F ONE TRACK READ CH 1	48
	F ONE TRACK READ CH 2	40
	F TWO TRACKS READ CH 1	49
	F TWO TRACKS READ CH 2	41
	G CH 1	4F
	G CH 2	47
SPECIFY CRC/INTERL.:	A, H NOT VALID	
	B, C, D, E, F, G VALID	
	TRK 1A (1)	F0
	TRK 2A (2)	F1
	TRK 1C (3)	F2
	TRK 2C (4)	F3
	TRK 1B (5)	F4
	TRK 2B (6)	F5
	TRK 1D (7)	F6
	TRK 2D (8)	F7

RX FROM CODEC - ERROR DISPLAY:

RX	DISPLAY	CRC	INTERL.	TRK NO.
XF	LOW ERROR RATE CH 1			
FX	LOW ERROR RATE CH 2			
XE	FIRST PASS P CORRECTION CH 1			
EX	FIRST PASS P CORRECTION CH 2			
XD	SECND PASS P CORRECTION CH 1			
DX	SECND PASS P CORRECTION CH 2			
XC	INTERPOLATION CH 1			
CX	INTERPOLATION CH 2			
XB	SPLICE CH 1			
BX	SPLICE CH 2			
XA	TRACKLOSS CH 1			
AX	TRACKLOSS CH 2			
X9	MUTE CH 1			
9X	MUTE CH 2			

EXAMPLE: C) LEVELS
PICTURE 1: DISPLAY GAIN SETTINGS IN dB

PICTURE 2: PEAK DISPLAY (dB) AND CLIPPING DISPLAY

PICTURE 3: CLIPPING AND TIME

SERVICE DISPLAYS:

EXAMPLE: B) COMMAND LIST

PICTURE 1: STATIC COMMANDS

PICTURE 2: DYNAMIC COMMANDS (LOSPD, HISPD, HISPDPDM)

4 Master Monitor

The Master monitor is part of the Master operating system. It is designed to enable a user to control the master section of the D820X digital tape recorder.
The INSTRUCTION SET listed below the monitor commands may be used to control the D820X via computer. It is a comprehensive set of commands including tape deck and audio commands. The optional Serial Interface RS-232 (Part-No. 20.820.432.00 is necessary for this application. Refer also to the ASCII command list in section 2.10.5 in volume 1 of the D820X manuals.
Connect a terminal (supported types below) or a personal computer to the DSub9 connector labeled "RS-232" at the rear panel of the tape transport. See par. 2.4.1.7 in vol. 1 of the D820X manuals for electrical interfacing. Par. 2.10.5 in the same manual describes the operation of the ASCII interface for the master monitor.
After power-up, the Master monitor displays the following message on a properly installed terminal or computer:

```
Welcome to the
D820X MASTER Monitor
Rel. ww/yy (C)PCM SoftTeam
STUDER AG  CH-8105 Regensdorf

Monitor for ESPRIT Terminal

>_
```

The message "Monitor for ESPRIT Terminal" indicates that the system has been installed for an "ESPRIT" terminal. After the logon message, the prompt ">" and and the cursor appears only if the command SYNCHRONIZER is set to off.
There is an alternative way to get the prompt message: after power-up synchronizer default setting is "on". No cursor appears. Type in "ECHO ON".

Commands:

Command format: >command {arg {arg {.. }}}

The command name is followed by a delimiter of space, comma, or carriage return. If there are no arguments, carriage return terminates the command; otherwise, a space or a comma separates the command from its argument. A space or comma separates arguments from each other. Some short commands (one character commands) require no carriage return and have no arguments.

Entering Commands:

Commands must be entered next to the prompt without a space. Upper or lowercase letters are allowed. The commands can be abbreviated. For example just type in DU<CR>, instead of DUMP<CR>. The Master monitor searches for the first string in the command table which matches the entered string and executes that command.
Misstyped commands can be corrected with "Back Space" and "Del". "ESC" deletes the command line.
The monitor displays an ERROR message when a command can not be found:

```
ERROR: command not found, use HELP
```

By typing the command "HELP<CR>" or just "H<CR>" all commands known to the system are listed. The listing can be interrupted and continued with the space bar or aborted with "ESC".

If the monitor detects a valid command with wrong or misstyped arguments, it displays an ERROR message and the syntax of the command. Then the command line will be displayed again with the cursor at the position of the wrong argument. This allows for quickly correcting arguments:

```
>SDG 1 I
ERROR: missing parameter

>SDG 1 I
             - cursor placed under wrong argument
```

A command is normally terminated if the prompt appears again without a preceeding error message.
Most arguments can be entered just by their first letters. Arguments for addresses or data can be entered in the following forms:

hexadecimal:	1B (default)
decimal:	27.D
binary:	11011.B
label:	CLRSCR (see command LABEL)

Detailed Command Description:

General: Arguments in brackets {} are optional. Some commands display the actual status if no argument is given:

Example:
```
>ECHO {Enter}
ECHO STATUS: ON
>_
```

Note: Use HELP to list all available commands.

Monitor Command List:

"@" (single stroke command)
Typing @ recalls the last entered command. The command can be executed with "carriage return" or modified as described in "Entering Commands".

"/" (single stroke command)
Displays data of last entered ROM/RAM memory address.

" " (single stroke command)
Displays data of incremented ROM/RAM memory address (see note below next par.).

"space bar" (single stroke command)
This command has two meanings:
1. Displays data of decremented ROM/RAM memory address (see note below).
2. (no single stroke command)
Typing "space bar" and "carriage return" displays the command list with syntax in the same way as the command "HELP".

Note: The two commands " " and "space bar" can be used solely after commands "/" and "MEMORY".

BREAKPOINT {-}{addr} This command allows to set break points for software debugging if the current program for test is resident in RAM. Without a parameter, all active break points are displayed. With "addr" a new break point can be specified. To remove a break point from a predefined address, type "-" before "addr".

Note: BREAKPOINT does not interrupt execution but displays the status of all CPU registers if the execution has passed a break point.

CALL addr

It is used to execute a program or subroutine. The program or subroutine must end with an RTS opcode. Call a program subroutine by its absolute address or by its label if it is assigned in the label table (see command LABEL).

COPY addr1 addr2 addr3

Copies an address block begining at address 1 and ending at address 2 from address 3 up.

DREALTIME {addr1} {addr2}

Dumps a block of memory in hex digits and ASCII characters repetitively. Press any character to hold/continue dump or "escape" to abort. Max. block length is 256 bytes. If no address is specified, the same memory block as before is dumped.

DUMP {addr1} {addr2}

Dumps a block of memory in hex digits and ASCII characters. Press any character to hold/continue dump or "escape" to abort. If no addr is specified, the same memory block as before is dumped.

DUMPMOTOROLA {addr1} {addr2} {addr3} {option}

Dumps a block of memory in Motorola format, with address 3 as the new start address of the memory block. If no address is specified, the same memory block as before is dumped.
Options:
- d <xx> = delay <xx> sec
- h = output help list of dump command
- n = output 32 <NUL> after each record
- o <text> = output <text> & <CR>
- w = wait for <EOT> after dump

ECHO {on/off}

Echo character entered by keyboard on the screen.

FILL addr1 addr2 data

Memorycells from address 1 to address 2 are filled with databyte(s). This command initializes a memory block.

HELP

All commands are displayed with syntax. Press any character to hold/continue help or "escape" to abort. "space bar" may be used instead of HELP.

LABEL

Displays a list of software labels with their addresses.

Note: addresses may be different for each version.

LOADMOTOROLA {option}

Loads a block of memory in Motorola format.
Options:
- a = initializes addressbus, needed for piggiback µP
- b = echo all characters before loading begins (S0-record)
- c <xxxx> = copy routine to RAM at addr <xxxx> and overwrite reset v.
- d <xx> = start after <xx> seconds delay
- e = echo all characters
- h = output help list of load command
- l = comment loading with S0 "loading.", S1".", S9 "terminated"
- o <text> = output <text>
- p = support auto write protection
- s = start program after loading
- w = wait after loading for ESC-character

MEMORY {addr}

Displays or changes memory data. Press "space bar" to skip to the next databyte, " " to skip back to the previous databyte,"/" to repeat the same databyte or "escape" to end. With this command an earlier content of the memory cells can be viewed. When no address is specified, the identical memory block as before is displayed.

MREALTIME {addr}

Displays memory data repetitively. Press any character to abort. If no address is specified, the same memory block as before is displayed.

SEARCH addr1 addr2 ascii_string

Searches for an ASCII string. Searching begins at address 1 and ends at address 2.

Example:

```
>SEARCH 20 1FFF missing : search the word missing in memory 20 to 1FFF
searching...
string found at address 0636
>
```

START task stacksize

Start a defined task. The task may be stopped by itself.

STAT {-r}

Status information is displayed repetitively. For more information see list "DISPLAY OF STATUS" below.

STOP

Stops the monitor task and displays the message: good bye... (for debugging use only).

TYPE

Searches through ROM for terminal drivers. If it has found a driver, it displays the name of the driver on the display. A driver can be confirmed by entering "y". The command TYPE searches for another driver after typing "n". A few terminal drivers are listed below (see also TYPE).

Preinstalled terminal drivers:

ANSI	ANSI terminal (eg. IBM PC)
ASCII	dummy terminal (no special functions)
ESPRIT	Esprit by Hazeltine or by Esprit model 6110
HP	Hewlett Packard model 2392A
TVI905	TeleVideo 905 terminal

Instruction Set

Note: optional statements are denoted with { }, obligatory statements with < >

ABBREV.	INPUT	OUTPUT	DESCRIPTION
LCD	LCD { ,:} CR	CR,LF	Local keyboard disabled
LCE	LCE { ,:} CR	CR,LF	Local keyboard enabled
RMD	RMD { ,:} CR	CR,LF	Remote keyboard disabled
RME	RME { ,:} CR	CR,LF	Remote keyboard enabled
STP	STP { ,:} CR	CR,LF	Function stop of tape deck
PLY	PLY { ,:} CR	CR,LF	Function play of tape deck
FWD	FWD { ,:} CR	CR,LF	Function forward of tape deck
WNF < >	WNF <xxxx> CR (0 <=xxxx<= 5FFF) 5FFFH=15.73 m/sec	CR,LF	Forward with selected speed (x{dec}/1563 = a m/sec) 1 m/sec = 061BH
RWD	RWD { ,:} CR	CR,LF	Function rewind of tape deck
WNR < >	WNR <xxxx> CR (0 <=xxxx<= 5FFF) 5FFFH=15.73 m/sec	CR,LF	Rewind with selected speed (x{dec}/1563 = a m/sec) 1 m/sec = 061BH
EDI	EDI { ,:} CR	CR,LF	Function edit of tape deck
REC	REC { ,:} CR	CR,LF	Function record of tape deck
STM < >	STM <(-)hh{ ,:}mm { ,:}ss{ ,:}xxx> CR with x=ms	CR,LF	Set timer at address < > with -10<hh<24, -1<mm<100, -1<ss<100, -1<xxx<1000 and -10hours < address < 24hours
TID	TID { ,} CR	CR,LF	Display time in the LED displ.
WAD	WAD { ,} CR	CR,LF	Display watch in the LED disp.
RTD	RTD { ,} CR	CR,LF	Display rt in the LED display
TCD	TCD { ,} CR	CR,LF	Display tc in the LED display
TM?	TM? { ,:} CR	(-,h)h:m m:ss:xxx CR,LF	Timer ? show the value from the actual LED display indication
LOC < >	LOC <(-)hh{ ,:}mm { ,:}ss{ ,:}xxx> CR with x=ms	CR,LF	Locate to address < > with -10<hh<24, -1<mm<100, -1<ss<100, -1<xxx<1000 and -10hours < address < 24hours
LMV < >	LMV <xxxxxxxx> CR with xx=1 byte	CR,LF	Wind to counter address < >
MV?	MV? { ,:} CR	xx xx xx xx CR,LF	Show state of move roller counter with xx : 1 byte
REA (i)	REA (i) { ,} CR i=1,2,3,4,F	CR,LF	Set channel i to ready 1,2 : CH1, CH2 3 : TC 4 : AUX (in AUX4MIX) F : all above
SAF (i)	SAF (i) { ,} CR i=1,2,3,4,F	CR,LF	Set channel i to safe 1,2 : CH1, CH2 3 : TC 4 : AUX (in AUX4MIX) F : all above

ABBREV.	INPUT	OUTPUT	DESCRIPTION
INP (i)	INP (i) { ,} CR i=1,2,3,4,F	CR,LF	Set channel i to input 1,2 : CH1, CH2 3 : TC 4 : AUX (in AUX4MIX) F : all above
REP (i)	REP (i) { ,} CR i=1,2,3,4,F	CR,LF	Set channel i to repro 1,2 : CH1, CH2 3 : TC 4 : AUX (in AUX4MIX) F : all above
RTN	RTN { ,:} CR	CR,LF	Rt sync enabled
RTF	RTF { ,:} CR	CR,LF	Rt sync disabled
SBA < >	SBA <xxxx> CR	CR,LF	Set ES bus address (two lower bytes min is 80H and two higher bytes min is 82H)
BA?	BA? { ,:} CR	xxxx CR,LF	Show ES bus address
MSN	MSN { ,} CR	CR,LF	Master safe enabled
MSF	MSF { ,} CR	CR,LF	Master safe disabled
SAP < >	SAP <i,j,x.y> CR with i=1,2 j=O,I -.1<x.y<20.1	CR,LF	Set analog levels (line level j / i: x.y dBm) (O: output, I: input)
SPF < >	SPF <x> { ,} CR x=0,4,6,8,10,15, 20 dBm	CR,LF	Set analog levels fixed (line level x dBm for all channels)
SD0	SD0 { ,} CR	CR,LF	Set digital gain 0 dB for all channels
SDG < >	SDG <i,j,(-)x.y> CR with i=1,2 j=O,I and -10.1<x.y<6.1	CR,LF	Set digital gain j / i: x.y dB (O: output, I: input)
CUL < >	CUL <i,x.y> CR with i=1,2 -0.1<x.y<20.1	CR,LF	Set cue level(s) channel i i: 1,2 ; x.y dBm
GA? < >	GA? <i,j> CR with j=ia,oa, id,od,cu and i=1,2	xx CR,LF	Gain ? ia = input analog oa = output analog id = input digital od = output digital cu = cue
SAI <j>	SAI <j> { ,} CR with j=m,a	CR,LF	Set autoinput j m = mute a = auto
AMU <j>	AMU <j> { ,} CR with j=y,n	CR,LF	Automute yes or no
MAN	MAN { ,} CR	CR,LF	Mute both main channels (soft mute), CH1, CH2
MAF	MAF { ,} CR	CR,LF	Demute both main channels (soft demute), CH1, CH2
AED <j>	AED <j> { ,} CR with j=y,n	CR,LF	Autoedit yes or no
DAI <j>	DAI <j> { ,} CR with j=a,d	CR,LF	Set digital or analog input

ABBREV.	INPUT	OUTPUT	DESCRIPTION
EMP <j>	EMP <j> { ,} CR with j=y,n	CR,LF	Emphasis yes or no
SSR <p>	SSR <p> { ,} CR with p=hi,lo	CR,LF	Set sampling rate to p rate; HI, LO as configured on D820X
AA4 <p>	AA4 <p> { ,} CR with p=mix,cue	CR,LF	Assign aux4 to mix or cue
RCU <j>	RCU <j> { ,} CR with j=ana,auto	CR,LF	Reproduce cue track(s) ana = repro of bias recordings auto= according to flag on rt
HPF <j>	HPF <j> { ,} CR with j=y,n	CR,LF	High pass filter on yes or no
IPC <p>	IPC <p> { ,} CR with p=int,ext, bal,unbal	CR,LF	Sync input intern,extern,balanced or unbalanced (composite video)
OPC <p>	OPC <p> { ,} CR with p=sec,wor	CR,LF	Output clock sector or word
IPT <p>	IPT <p> { ,} CR with p=vid_ebu, ntsc_bw, ntsc_col, syn, wcl	CR,LF	Input video ebu, video ntsc bw, video ntsc col, synchronizer or word clock
SRH	SRH { ,} CR	CR,LF	Rehearsal mode enabled (EE2) Stereo operation only
CRH	CRH { ,} CR	CR,LF	Rehearsal mode disabled (EE2) Stereo operation only
EED	EED { ,} CR	CR, LF	Any connected EE loop disabled
EEL	EEL { ,} CR	CR, LF	EE loop 1 (left) enabled
EER	EER { ,} CR	CR, LF	EE loop 1 (right) enabled
EE1	EE1 { ,} CR	CR, LF	EE loop 1 enabled (both CH)
VDM <p>	VDM <p> { ,} CR with p=%,ips,ht	CR,LF	Set varispeed display mode %, inch per second or half tone
VEN	VEN { ,} CR	CR,LF	Varispeed enabled
VEF	VEF { ,} CR	CR,LF	Varispeed disabled
SVS < >	SVS <(-)x.y> CR with -12.6<x.y<12.6	CR,LF	Set varispeed x.y %
LFT	LFT { ,} CR	CR,LF	Lifter enabled
EDT	EDT { ,} CR	CR,LF	Lifter disabled
FEN	FEN { ,} CR	CR,LF	Fader start ready key enabled
FEF	FEF { ,} CR	CR,LF	Fader start ready key disabled
ROL <p>	ROL <p> CR with p=s,p,r	CR,LF	Set rollback stop, play or record
FRA <p>	FRA <p> { ,} CR with p=25,29.97, 30	CR,LF	Set time code delay to p frames per second
DIS <p>	DIS <p> { ,} CR with p=co,usr, una	CR,LF	Select display of code, user bits or unassigned bits
ST?	ST? { ,} CR	xx CR,LF	Status equates ? see list of STATUS EQUATES

ABBREV.	INPUT	OUTPUT	DESCRIPTION
MS?	MS? { ,} CR	xx CR,LF	Messages from syscon 76543210 └→ VCXO locked, TTLOCK └→ PLL locked, RANGEOK └→ digital input lock.
SO?	SO? <x> { ,} CR	xx CR,LF	Display of status. For x see POSITION in list DISPLAY OF STATUS.
DST	DST { ,} CR	(-,h)h:m m:ss:xxx yy CR,LF	Display of status. Time and tape deck status yy acc. to list STATUS EQUATES x= msec and yy = byte "CODE" (escape with CTRL X or ESC)
STAT	STAT {-r ,} CR with -r = repeat	STATUS CR,LF	Display of status, according to table DISPLAY OF STATUS.
SON	SON { ,:} CR	CR, LF	Synchronizer enabled
SOF	SOF { ,:} CR	CR, LF	Synchronizer disabled
TDN	TDN { ,} CR	CR, LF	Time code delay on
TDF	TDF { ,} CR	CR, LF	Time code delay off
APE	APE { ,} CR	CR, LF	Append mode enabled
APD	APD { ,} CR	CR, LF	Append mode disabled
LWD	LWD { ,} CR	CR, LF	Library wind disabled
LWE	LWE { ,} CR	CR, LF	Library wind enabled
SMS < >	SMS <x.y> CR with 0.1<x.y<15.0	CR, LF	set max. wind speed
SWS < >	SWS <x.y> CR with 0.1<x.y<15.0	CR, LF	set library wind speed
MV?	MV? { ,} CR	CR, LF	Move roller counter ? 4 byte, hex display

Display of Status

To escape from status display mode press ESC; to stop or start in repetitive mode press any other key

POSITION	BYTE	DESCRIPTION
1	1	Status of local keyboard 76543210 └──────→ 0: enabled, 1: disabled
2	1	Status of remote keyboard 76543210 └──────→ 0: enabled, 1: disabled
3	1	Status of master clock configuration 76543210 └──→ output sync 0: sector, 1: word └──→ ext. ref. input 0: balanced 1: unbalanced 000 ──→ ext. ref. video ebu 001 ──→ ext. ref. video ntsc bw 010 ──→ ext. ref. digital input (bal only) 011 ──→ ext. ref. synchronizer 100 ──→ not used 101 ──→ ext. ref. word sync. 110 ──→ ext. ref. video ntsc col └──→ input 0: extern, 1: intern
4	1	Status of sampling frequency 76543210 └──→ 0: not defined 1: 48 kHz 2: 44.1 kHz 3: 32 kHz 4: 44.056 kHz └──→ 1: lower sampling rate (LO) 2: higher sampling rate (HI)
5	1	Status of actual display 0: timer 1: watch or lap 2: time code 3: reference time
6	1	Status of safe/ready 76543210 (0: ready, 1: safe) └──→ channel 1 └──→ channel 2 └──→ aux 1 (TC) └──→ aux 2 (RT) └──→ aux 3 (ch2/aux) └──→ aux 4 (ch1/mix) └──→ master
7	1	Status of repro/input 76543210 (0: repro, 1: input) └──→ channel 1 └──→ channel 2 └──→ aux 1 (TC) └──→ aux 3 (AUX)
8	1	Status of actual tape type 0: tape A 1: tape B
9	1	Status of fader 76543210 00 → fader A 01 → fader B 10 → fader C 11 → fader B └──→ fader prepared └──→ fader active

POSITION	BYTE	DESCRIPTION
10	1	Status of autoinput 76543210 bit 0 → autoinput A bit 1 → autoinput B bit 7 → 0: automute, 1: autoinput according bit 0 & 1
11	2	Status of toggle keys Base + 0 76543210 bit 0 → autoedit 0: off, 1: on bit 1 → automute 0: off, 1: on bit 2 → rehearse 0: off, 1: on bit 3 → not used bit 4 → level display permanent 0: norm 1: input bit 5 → varispeed 0: off, 1: on bit 6 → ignore di c word 0: off, 1: on bit 7 → channel control parallel 0: off 1: on Base + 1 76543210 bit 0 → not used bit 1 → high pas filter 0: off, 1: on bit 2 → not used bit 3 → play cue 0: analog 1: automatic bit 4 → input 0: digital, 1: analog bit 5 → not used bit 6 → emphasis 0: off, 1: on bit 7 → quality display 0: off, 1: on
12	4	Status of constant relative tape time {HEX}
13	1	Status of lifter 76543210 bit 0 → 0: normal control from tape mpu 1: lifter disabled bit 7 → 1: lifter enabled
14	1	Status of locator 00H : no locator 01H : locator 1 02H : locator 2 03H : locator 3 04H : locator 4 05H : locator 5 06H : last play / stop position 07H : last play / play position 08H : last play / record position 09H : reserved 0AH : set timer 0BH : set address 0CH : rollback / stop time 0DH : rollback / play time 0EH : rollback / record time 0FH : zero
15	1	Status of varispeed display 76543210 bit 0 + 1 → 00 → inch per second 01 → half tone 10 → % bit 7 → indicator enhanced
16	1	Status of varispeed selection 00H : -12.5 % 7DH : 0 % → step = 0.1 % (01H) FAH : 12.5 % /
17	4	Status of error handling Base + 0 : error definition Base + 1 : error number Base + 2 : Base + 3 : → address of error definition

Status Equates

CODE	DESCRIPTION
01H	TAPE OUT NOT ACHIEVED
81H	TAPE OUT ACHIEVED
02H	STOP NOT ACHIEVED
82H	STOP ACHIEVED
03H	REWIND NOT ACHIEVED
83H	REWIND ACHIEVED
04H	FORWARD NOT ACHIEVED
84H	FORWARD ACHIEVED
05H	NOT USED
85H	NOT USED
06H	NOT USED
86H	NOT USED
07H	PLAY INTERNAL REFERENCE NOT ACHIEVED
87H	PLAY INTERNAL REFERENCE ACHIEVED
08H	NOT USED
88H	NOT USED
09H	RECORD NOT ACHIEVED
89H	RECORD ACHIEVED
0AH	NOT USED
8AH	NOT USED
0BH	EDIT NOT ACHIEVED
8BH	EDIT ACHIEVED
40H	SHUTTLE BACKWARD NOT ACHIEVED
0C0H	SHUTTLE BACKWARD ACHIEVED
41H	SHUTTLE FORWARD NOT ACHIEVED
0C1H	SHUTTLE FORWARD ACHIEVED
42H	LOCATE WIND BACKWARD NOT ACHIEVED
0C2H	LOCATE WIND BACKWARD ACHIEVED
43H	LOCATE WIND FORWARD NOT ACHIEVED
0C3H	LOCATE WIND FORWARD ACHIEVED
07H	LOCATE PLAY BACKWARD NOT ACHIEVED (*)
07H	LOCATE PLAY BACKWARD ACHIEVED (*)
07H	LOCATE PLAY FORWARD NOT ACHIEVED (*)
07H	LOCATE PLAY FORWARD ACHIEVED (*)
46H	CUEING BACKWARD NOT ACHIEVED
0C6H	CUEING BACKWARD ACHIEVED

CODE	DESCRIPTION
47H	CUEING FORWARD NOT ACHIEVED
0C7H	CUEING FORWARD ACHIEVED
48H	NOT USED
0C8H	NOT USED
49H	NOT USED
0C9H	NOT USED
4AH	NOT USED
0CAH	NOT USED
4BH	NOT USED
0CBH	NOT USED
59H	TAPE DUMP NOT ACHIEVED
0D9H	TAPE DUMP ACHIEVED
5AH	CUT WITH DISTANCE NOT ACHIEVED
0DAH	CUT WITH DISTANCE ACHIEVED
0DDH	BURN-IN TEST ACHIEVED

(*) Composite command/status message. the last transmitted command is indicated. 07h (play internal reference) is indicated after termination of locate play backward or forward.

Examples:

>FWD = fast forward

>STP = stop

>LOC_-01_43_00_800 = locate to address - 1.43.00.800

>SAF_3/ = time code channel SAFE (recording inhibited)

>GA?_1_0A* = request for analog output gain value, channel 1: answer of the recorder e.g. A9 HEX

>SAP_1_O_8.3* = set analog output level channel 1 to 8.3 dBV.7; the old value will be overwritten

>DU_24C_267 = All tape tension parameters are displayed on the terminal in hexadecimal format, e.g.

```
      0  1  2  3  4  5  6  7  8  9  A  B  C  D  E  F
0240 xx xx xx xx xx xx xx xx xx xx xx xx 00 83 87 82  ................
0250 00 00 E5 EC 00 00 00 00 01 2D 82 00 00 00 00 00  .............-....
0260 3C F0 80 00 09 90 00 00 xx xx xx xx xx xx xx xx  <...............
0270 .. .. .. .. .. ..
.... .. ..
....
```

The address of a parameter can be computed by adding an offset which is tabulated in a separate list to the start address.
For start address see section MASTER MONITOR, command "LABEL" in volume III of the D820X manual.
For offset address see section MASTER MONITOR, command "PARAMETER" in volume III of the D820X manual.

Table of Contents Section 5: Signal Wire List

5.1 Assemblies and Groups 2

5.2 Elements and Points 2

5.3 Main Connection Types 3

5.4 Wire Labeling, Color Scheme 4

5.5 Explanations to LOCATION PIN LIST 5

5.6 Explanations to SIGNAL WIRE LIST 6

5 Signal Wire List

In order to follow a signal in the recorder, four different references are at disposal:
- the circuit diagram
- the signal name description
- the location pin list
- the signal wire list.

The circuit diagram is needed to locate the signal at the in- and/or output(s) of a board, because after processing the signal is named differently. In the signal name description list, the source and sink of a specific signal is tabulated together with a brief explanation. The most important lists, however, are the location pin list, found at top of the wiring list and the signal wire list at the end. The recorder has been split into assemblies (ASY), groups (GRP) and elements (ELM) and at least these names should be known to gain access to a certain connector and connecting point (PNT) and to understand the wiring list.
The location pin list is used only when assembly, group and element names are known. The assembly names are given at the begin of each volume of the D820X documentation. Drawings with the group and element names can be found in chapter 4, drawings INTERCONNECTION and CONNECTOR LOCATION of the third volume before the wiring list.
The access to the signal wire list is the signal name itself. When this is known, its distribution is tabulated in the signal wire list again by means of assembly, group, element and pin designations. No reference is made whether a signal is sourced or sinked at a specific pin. This information is present in the circuit diagram only.
The signals are referred to by names maximum 8 characters long and have been constructed from various abbreviations, in the digitalaudio section namely starting with

AD	referring to analog input
ANA	referring to analog signals
AUX	referring to cue tracks
CBUS	referring to sysbus interconnections
CC	referring to interconnections codec control/codec memory
CLK	referring to timing lines
DA	referring to analog output
DC	referring to signals between codec and dapro
DD	referring to dapro internal interconnections
DP	referring to display panel
I	designates an inverse (active low) signal
PB	referring to playback signals
PD	referring to cue (pdm)/cue/dapro interconnections
RT	referring to reference track
SSDA	referring to the ssda interconnections (processors)
TC	referring to time code
TT	referring to connections from/to timing and test
WR	referring to write signals

An I after this first block of abbreviations stands for a following inverse (active low) signal. The signal names have been choosen to be as self-explanatory as possible.

5.1 Assemblies and Groups

The electrical hardware of the D820X is subdivided into assemblies (ASY) and groups (GRP). These are interconnected in various forms (see par. 4.3) and the cables are identified (normally at both ends) with a corresponding assembly and group number. The assembly and group arrangements and the main interconnections are listed in the survey of assemblies and groups, par. 4, drawings INTERCONNECTION and CONNECTOR LOCATION.

5.2 Elements and Points

Groups are subdivided into elements (ELM) on which the connecting points (PNT) are located.

5.3 Main Connection Types

Typ	Description	STUDER No.
	Connector, D-type, crimp:	
A	Contact pin, for thin stranded wire	54.02.0451
AA	Contact pin, for heavy stranded wire	54.02.0455
B	Contact socket, for thin stranded wire	54.02.0450
BB	Contact socket, for heavy stranded wire	54.02.0454
	CIS connector:	
C	Contact socket	54.01.0402
D	Contact pin	54.01.0401
	MOLEX connector	
F	Contact socket, for thin stranded wire	54.02.0412
FF	Contact socket, for heavy stranded wire	54.02.0413
G	Solder hook	29.21.6002
H	Wire/stranded wire, tinned (6 mm)	--.--.----
I	Connector, D-type, crimp, contact pin	54.02.1112
	Flat connector, AMP FASTON, crimp, 0.8 x 6.3 mm:	
JM	Contact, female, for thin stranded wire	54.02.0337
J	Contact, female, for heavy stranded wire	54.02.0332
JJ	Contact, fem., for very heavy stranded w.	54.02.0338
K	Wire/stranded wire, stripped 8 mm, tinned 1 mm	--.--.----
L	Wire/stranded wire, tinned 4 mm	--.--.----
M	MOLEX contact pin, for thin stranded wire	54.02.0411
MM	MOLEX contact pin, for heavy stranded w.	54.02.0410
MY	AMP flat connector (blade)	54.02.0344
N	CIS connector, contact pin	54.01.0225
O	Contact spring to EURO card conn. strip	54.01.0376
	PCB contact strip:	
P	Contact strip, for thin stranded wire	54.06.4512
PP	Contact strip, for heavy stranded wire	54.06.4510
Q	Socket strip, contact socket	54.01.0451
R	Connector, D-type, crimp, contact socket	54.02.1111
S	Wire/stranded wire, stripped 4 mm/tinned	--.--.----
T	TERMI-POINT connector on WIRE WRAP post	--.--.----
U	Detent-spring solder contact, crimp	54.03.0201
UU	Detent-spring solder contact, crimp	54.34.6002
V	Contact, female, for heavy stranded wire	54.02.0432
VV	Contact, female, for thin stranded wire	54.02.0474
W	Wrapped	--.--.----
	Flat connector AMP FASTON, crimp, 0.5 x 2.8 mm:	
X	Contact, female, for thin stranded wire	54.02.0325
XX	Contact, female, for heavy stranded wire	54.02.0329
	Flat connector AMP FASTON, crimp, 0.8 x 2.8 mm:	
Y	Contact, female, for thin stranded wire	54.02.0326
YY	Contact, female, for heavy stranded wire	54.02.0327
Z	Not tinned	--.--.----

5.4 Wire Labeling, Color Scheme

Three numbers can be found on the end of each important wire:
these specify the corresponding group, the element, and the connecting point.

The flat cable connectors carry labels at both ends indicating:

- Number of assembly, group and element where the connector itself is to be inserted.
- Either the name of the assembly and group where the connector at the opposite end of the cable is to be connected (the assembly name is stated only, when the other end is located on a different assembly),
  or
  The name of the group where the connector itself is to be inserted.

The labels attached to the ribbon cables also carry a short text, describing the element.

Examples:

- CAPSTAN MOTOR DRIVE AMPLIFIER, GRP39, MOLEX socket ELM03. Wire colors at the matching connector (GRP20, ELM71) yel and red, wires printed 20-71-1 and 20-71-6. That means that the red wire is connected to pin No. 6 of the MOLEX connector.
  The other end of the red wire is marked 20-62-6, i.e. it is connected to the point No. 6 of the wire field ELM62 on group BASIS PCB TAPE DECK, GRP20.
- The flat cable connector plugged to BASIS PCB TAPE DECK GRP20 ELM14 (connection to the FUSE/SUPPLY FAILURE DETECTOR PCB) is labeled as follows:

  ```
  GR.20  EL.14
  TO FUSE/SUPP
  FAILURE DET.
  ```

  The connector at the other end of the flat cable is marked with the following tag:

  ```
  GR.59  EL.01
  FUSE/SUPPLY
  FAILURE DET.
  ```

Color scheme

0	black	(blk)
1	brown	(brn)
2	red	(red)
3	orange	(org)
4	yellow	(yel)
5	green	(grn)
6	blue	(blu)
7	violet	(vio)
8	grey	(gry)
9	white	(wht)
-	uncolored	(unc)

5.5
Explanations to LOCATION PIN LIST

This list is arranged by assembly, group and element number. If only the signal name is known, consult the SIGNAL WIRE LIST (refer to 4.6).

Example:

```
ASY 11          1.861.080.00  TAPE TRANSPORT D820X   <-- ASSEMBLY

GRP 39          1.820.774.00                         <-- GROUP
                <--  <--  <--  CONTINUATION
==========================================

ELM  3                                               <-- ELEMENT
      FROM GRP20, ELM71                P03
------------------------------------------
PNT SIGNAL NAME  COLOR LV TYPE           F
 1  OCAPMOT              M
 2
 3
 4
 5
 6  +CAPMOT              M
------------------------------------------
 |     |                  |
 |     |                  |
 |     └ SIGNAL NAME      └ CONNECTION TYPE
 |
 └ CONNECTION POINT
```

Assembly: ASY 11, 1.861.080.00
TAPE TRANSPORT D820X

Group: GRP39, 1.820.774.00
CAPSTAN MOTOR DRIVE AMPLIFIER

Element: ELM03 (MOLEX socket for power supply)

Connection points: PNT01 and PNT06

Signal names: OCAPMOT, +CAPMOT

Colors: none

5.6 Explanations to SIGNAL WIRE LIST

This list is arranged in alphabetic order by signal name (the signal names of the neutrals and the supply voltages are located at the top of the list). If the signal name is known, further information can be obtained by consulting this list. If only the group designation or the group number are known, consult the LOCATION PIN LIST (refer to 4.5).

The signal names are listed in the first column (SIGNAL NAME). The wire color can be found in the second column (COLOR). The fourth column specifies groups, elements, and connecting points on which the signal concerned is available (GRP ELM PNT). This column is arranged in numerical order by group number, *it does not give any information on the way of the signal* through the recorder.

Example (refer to SIGNAL WIRE LIST page 92)

```
**********************************************************************************************************************
*    WILLI STUDER AG   *   S I G N A L   W I R E   L I S T          * 86/12/08 *  10:54  * P A G E  92 *
**********************************************************************************************************************
*           1.861.022.00  D820X PCM RECORDER                                  *  86/08/27 - 00                        *
**********************************************************************************************************************

SIGNAL NAME  COLOR  MI  ASY GRP ELM PNT  S  LV  TYPE       DESCRIPTION OF ELEMENT                  REMARK   ELEMENT NR.
-----------  -----  --  ---------------  -  --  ---------  -------------------------------------  -------  --------------
+ 5V                    11  38   1   9          F          FROM GRP39. ELM02              J01
                        11  39   2   9          M          TO GRP38. ELM01                P02
-----------  -----  --  ---------------  -  --  ---------  -------------------------------------  -------  --------------
+CAPMOT      2           1  79   1  24                     POWER CONNECTOR (24 PIN MOLEX FEM)
             2           1  79   2  24                     POWER CONNECTOR (24 PIN MOLEX MALE)
             2          11  11   3   3          L          RECTIFIER                      DZ03                  70.01.0231
             2          11  12   4   1          L          CAPACITOR                      C04                   59.26.7103
             2          11  12   5   7          M          CONNECTOR TO GRP32. ELM01      P01
             2          11  19   1  24          F          FROM GRP32. ELM02              J01
             2          11  19   2  24          M          TO GRP21. ELM02                P01
                        11  20  14   1                     FUSE FAILURE DETECTOR          P14
                        11  20  14   2                     FUSE FAILURE DETECTOR          P14
             2          11  20  62   6          L          WIRE FIELD
             2          11  20  62   7          L          WIRE FIELD
             2          11  20  70  24          F          FROM GRP21. ELM01              J13
             2          11  20  71   6          F          TO CAPSTAN MOTOR DRIVE AMP.
                        11  32   1   7          F          INPUT FROM GRP12. ELM05        J01
                        11  32   2  24          M          OUTPUT                         P01
                        11  39   3   6          M          FROM GRP20. ELM71              P03
                        11  59   1   1                     FROM GRP20. ELM14              P01
                        11  59   1   2                     FROM GRP20. ELM14              P01
-----------  -----  --  ---------------  -  --  ---------  -------------------------------------  -------  --------------
```

Signal name: +CAPMOT

Color: 2 (red) or none (flat cable)

Connection type: M (MOLEX contact pin for thin stranded wire), or
F (MOLEX contact socket for thin stranded wire, or
L (soldered directly to a PCB)

Part of the signal path:

GRP	ELM	PNT	
11	03	03	Rectifier bridge, "+" connection point, soldered. From here, a red wire leads to the
12	04	01	Smooting capacitor, "+" connection point, soldered. In addition, a
12	05	07	Wire harness with MOLEX connector leads on to the
32	01	07	MOLEX socket on the SWITCHING STABILIZER. The signal is looped through to the
32	02	24	MOLEX plug on the SWITCHING STABILIZER, there the
19	01	24	Wire harness with MOLEX socket is inserted.
19	02	24	MOLEX plug at the other end of the wire harness is connected to
21	02	24	MOLEX socket on the BASIS PCB AUDIO. Here, the signal is looped through to the
21	01	24	MOLEX plug on the BASIS PCB AUDIO, where the
20	70	24	Wire harness with MOLEX socket is plugged in. The other end of the wire harness is soldered to the
20	62	06	Wire field on the BASIS PCB TAPE DECK, the signal is looped through to the
*20	62	07	Wire field on the BASIS PCB TAPE DECK. At the other end of the wire harness that is soldered here to the PCB there is a
20	71	06	MOLEX socket, plugged to the
39	03	06	MOLEX socket on the CAPSTAN MOTOR DRIVE AMPLIFIER

* Here the signal is branched out. This is shown by the group number appearing more than two times in the SIGNAL WIRE LIST.

STUDER - WIRING

PART NUMBER: 1.861.022.00 * D820X PCM RECORDER * INDEX: 00

DATE OF ORIGIN: 86/08/27
DATE OF PROC. : 86/12/08

GROUP NODE = *
INTER GROUP NODE = #
DIRECT WIRE TO * = <
WIRING NOT COMPUTED = @

SUMMARY

ASSEMBLYS	6	
GROUPS	69	
ELEMENTS	257	
PINS (TOTAL)	6360	(UNUSED PINS 1427)
MULTIPLE PINS	1	
CODING KEYS	15	
SIGNALS	1081	(UNUSED SIGNALS 121)

RECORDS READ 6711

OPTIONS SPECIFIED : LOCLIS, SIGLIS, ALLCOL, WIRALL

OPTIONS USED : LOCLIS, SIGLIS, ALLCOL, WIRALL

LISTINGS GENERATED :	PAGE	ERR	WRN
GROUP SUMMARY	2	0	0
LOCATION PIN LIST	4	0	1
SIGNAL WIRE LIST	86	0	0

====>> NO PUNCH GENERATED <<====

WILLI STUDER AG * GROUP SUMMARY * 86/12/08 * 10:54 * PAGE 2 *

1.861.022.00 D820X PCM RECORDER * 86/08/27 - 00

ASY	GRP	PART NUMBER	DESCRIPTION	UNUSED PINS	USED PINS	TOT.PINS	MULT.PINS	COD.KEYS	TOT.ELM	REM
1	70	1.861.731.00	SIGNAL QUALITY DISPLAY	0	26	26	0	0	1	
1	73	1.861.583.00	INTERCONNECTION BOX	2	73	75	0	0	3	
1	74	1.861.582.00	EXTERNAL PANEL CONNECTOR	3	22	25	0	0	1	
1	76	1.861.586.00	CUE INPUT/OUTPUT	0	18	18	0	1	4	
1	79	1.861.726.00	POWER SUPPLY (DELTA-MOLEX PRINT)	0	98	98	0	0	4	
1	80	1.861.890.00	BACKPANEL RACK	551	565	1116	0	0	19	
2	1	1.861.895.00	BACKPANEL CAGE	197	262	459	0	0	7	
2	2	1.861.803.00	HEADBLOCK CONNECTOR WRITE	2	24	26	0	0	1	
2	3	1.861.801.00	HEADBLOCK CONNECTOR READ	0	25	25	0	0	1	
2	4	1.861.802.00	TAPE DECK MONITOR CONNECTORS	1	8	9	0	0	2	
2	5	71.01.0108	INTERNAL SPEAKER	0	2	2	0	0	1	
2	6	54.24.0102	INTERNAL PHONE PLUG	2	4	6	0	0	1	
3	1	1.861.742.00	DISPLAY PANEL PROCESSOR (DP PROC)	5	46	51	0	0	2	
3	2	1.861.744.00	CHANNEL CONTROL PANEL TRANSCEIVER	10	76	86	0	0	4	
3	3	1.861.746.00	MONITOR PANEL AMPLIFIER (MP AMP)	7	64	71	1	0	6	
3	4	71.01.0108	SPEAKER RIGHT	0	2	2	0	0	1	
3	5	71.01.0108	SPEAKER LEFT	0	2	2	0	0	1	
3	6	54.24.0102	PHONES PLUG	0	4	4	0	0	1	
3	7	1.912.001.30	TANDEM POTENTIOMETER	0	6	6	0	0	1	
3	8	1.861.745.00	MONITOR PANEL KEYBOARD(MP KYB)	7	18	25	0	0	1	
3	9	1.861.741.00	DISPLAY PANEL KEYBOARD (DP KYB)	2	24	26	0	0	1	
3	10	1.861.743.00	CHANNEL CONTROL PANEL KEYBOARD	4	32	36	0	0	2	
4	1	1.861.885.00	BACKPANEL BOX	362	1376	1738	0	0	26	
4	2	1.861.775.00	ANALOG I/O	2	24	26	0	0	6	
4	3		DI/DO/TC/RT/CLOCK/TEST/BNC	44	61	105	0	0	15	
5	1	1.116.861.20	READ HEAD	0	24	24	0	0	1	
5	2	1.116.861.10	WRITE HEAD	2	24	26	0	0	1	
5	3	1.861.805.00	HEAD PREAMPLIFIER	0	49	49	0	0	3	
11	1	54.04.0111	POWER INPUT	0	3	3	0	0	1	
11	2		EARTH CONNECTORS	0	3	3	0	0	3	
11	3	55.12.0001	POWER SWITCH	0	4	4	0	0	1	
11	4	1.185.337.00	LINE FILTER	6	15	21	0	0	1	
11	5		FUSES (LINE)	0	4	4	0	0	2	
11	6		DISTRIBUTOR	8	24	32	0	0	1	
11	7		VOLTAGE SELECTOR	0	12	12	0	0	3	
11	8	1.820.520.00	MAIN TRANSFORMER (SPOOLING MOTORS)	0	44	44	0	0	5	
11	9	1.820.520.00	MAIN TRANSFORMER	0	32	32	0	0	4	
11	10		FUSES (SECONDARY)	0	6	6	0	0	3	
11	11		RECTIFIERS	4	32	36	0	0	4	
11	12		CAPACITORS	2	18	20	0	0	5	
11	18	1.820.592.00	SUPPLY CABLE, SPOOLING MOTORS	12	36	48	0	0	3	
11	19	1.820.591.00	SUPPLY CABLE, ELECTRONICS	0	48	48	0	0	2	
11	20	1.820.701.00	BACKPANEL TAPE DECK	113	961	1074	0	8	44	
11	25		REMOTE CONTROL PANEL	2	72	74	0	3	5	
11	26	1.820.729.00	SERIAL REMOTE INTERFACE	3	32	35	0	1	2	
11	27	1.820.738.00	PARALLEL REMOTE INTERFACE	2	115	117	0	2	5	

PUBLISHED: 12/86

WILLI STUDER AG * G R O U P S U M M A R Y * 86/12/08 * 10:54 * P A G E 3

1.861.022.00 D820X PCM RECORDER * 86/08/27 - 00

ASY	GRP	PART NUMBER	DESCRIPTION	UNUSED PINS	USED PINS	TOT.PINS	MULT.PINS	COD.KEYS	TOT.FLM	REM
11	30	1.820.775.00	SPOOLING MOTOR DRIVE AMPLIFIER RIGHT	3	27	30	0	0	3	
11	31	1.820.777.00	SPOOLING MOTOR SUPPLY	12	46	58	0	0	4	
11	32	1.820.790.00	SWITCHING STABILIZER	2	34	36	0	0	2	
11	33	1.820.775.00	SPOOLING MOTOR DRIVE AMPLIFIER LEFT	3	27	30	0	0	3	
11	34	59.26.6223	CAPACITOR, BELONGING TO GRP 31	0	12	12	0	0	2	
11	36	1.820.190.00	TORQUE MOTOR, LEFT	1	11	12	0	0	2	
11	37	1.820.190.00	TORQUE MOTOR, RIGHT	1	11	12	0	0	2	
11	38	1.021.695.00	CAPSTAN MOTOR (ELECTRONICS BOARD)	13	15	28	0	0	5	
11	39	1.820.774.00	CAPSTAN MOTOR DRIVE AMPLIFIER	4	30	34	0	0	3	
11	40	1.080.230.00	BRAKE ASSEMBLY, LEFT	1	2	3	0	0	1	
11	41	1.080.240.00	BRAKE ASSEMBLY, RIGHT	1	2	3	0	0	1	
11	42	1.820.772.00	TAPE TENSION SENSOR, LEFT	3	7	10	0	0	1	
11	43	1.820.772.00	TAPE TENSION SENSOR, RIGHT	3	7	10	0	0	1	
11	44	1.820.793.00	OPTO SENSOR	0	10	10	0	0	1	
11	45	1.820.770.00	MOVE SENSOR	1	9	10	0	0	1	
11	46	1.820.773.00	TAPE LIFTER CONTROL, LEFT	5	11	16	0	0	1	
11	47	1.820.773.00	TAPE LIFTER CONTROL, RIGHT	5	11	16	0	0	1	
11	48	1.820.240.00	PUSHBUTTON ASSEMBLY	4	42	46	0	0	3	
11	49	1.820.250.00	EDIT ASSEMBLY	1	14	15	0	0	2	
11	50	1.820.768.00	TAPE DECK DISPLAY DRIVER	5	117	122	0	0	4	
11	51	1.820.230.00	COMMAND UNIT	3	37	40	0	0	1	
11	52	1.820.233.00	LCD DISPLAY UNIT	0	16	16	0	0	1	
11	59	1.820.737.00	FUSE/SUPPLY FAILURE DETECTOR	1	15	16	0	0	1	
			DISTRIBUTED IN 69 GRP TOTAL :	1427	4933	6360	1	15	257	

WILLI STUDER AG * L O C A T I O N P I N L I S T * 86/12/08 * 10:54 * P A G E 4

1.861.022.00 D820X PCM RECORDER * 86/08/27 - 00

ASY 1 1.861.310.00 RACK ELECTRONICS

GRP 70 1.861.731.00
SIGNAL QUALITY DISPLAY

ELM 1 1.861.731.00
SIGNAL QUALITY (26-PIN FLATCABLE)

PNT	SIGNAL NAME	COLOR	LV	TYPE	F
1	+5.0				
2	+5.0				
3	+5.0				
4	+5.0				
5	+5.0				
6	+5.0				
7	DSPB-7				
8	DSPB-6				
9	DSPB-5				
10	DSPB-4				
11	DSPB-3				
12	DSPB-2				
13	DSPB-1				
14	DSPB-0				
15	DSPA-0				
16	DSPA-1				
17	DSPA-2				
18	DSPA-3				
19	DSPA-4				
20	DSPA-5				
21	DSPA-6				
22	DSPA-7				
23	+0.0				
24	+0.0				
25	+0.0				
26	+0.0				

GRP 73 1.861.583.00
INTERCONNECTION BOX

ELM 1 1.861.583.00
BOX-RACK 1 (RACK) (25 PIN D-SUB)

PNT	SIGNAL NAME	COLOR	LV	TYPE	F
1	DACOUT1				
2	DACOUT2				
3	PDIBCLK				
4	PDIWCLK				
5	PDIDATA				
6	TIREFINT				
7	TIREFEXT				
8	WRITR1				
9	WRITR2				
10	PBITR1				
11	PBITR2				
12	PDICLK3				
13	PDCLK3				
14	GNDDAC1				
15	GNDDAC2				
16	PDBCLK				
17	PDWCLK				
18	PDDATA				
19	TREFINT				
20	TREFEXT				
21	WRTR1				
22	WRTR2				
23	PBTR1				
24	PBTR2				
25	K-PWRUP				

./.

GRP 73 1.861.583.00
<-- <-- <-- CONTINUATION

ELM 2 1.861.583.00
BOX-RACK 2 (RACK) (25 PIN D-SUB)

PNT	SIGNAL NAME	COLOR	LV	TYPE	F
1	SSDAICLK				
2	SSDAIDTR				
3	SSDAIMTX				
4	SSDAIMRX				
5	SSDAICTS				
6	CBUSICLK				
7	CBUSIAD				
8	CBUSIDAT				
9					
10	+0V-				
11	+0V-				
12	+0V-				
13	+0V-				
14	SSDACLK				
15	SSDADTR				
16	SSDAMTX				
17	SSDAMRX				
18	SSDACTS				
19	CBUSCLK				
20	CBUSAD				
21	CBUSDAT				
22	+20PC				
23	+20PC				
24	+20PC				
25	+20PC				

./.

PUBLISHED: 12/86

WILLI STUDER AG * L O C A T I O N P I N L I S T * 86/12/08 * 10:54 * P A G E 6

1.861.022.00 D82JX PCM RECORDER * 86/08/27 - 00

ASY 1 1.861.310.00 RACK ELECTRONICS <-- <-- <-- CONTINUATION

GRP 79 1.861.726.00
POWER SUPPLY (DELTA-MOLEX PRINT)

ELM 1
POWER CONNECTOR (24 PIN MOLEX FEM)

PNT	SIGNAL NAME	COLOR LV TYPE	F
1	+5.6	3	
2	+5.6	3	
3	+5.6SENS	3	
4	TD-C76K	9	
5	+0.0	0	
6	+0.0	0	
7	T-PWRON	5	
8	+0.0	0	
9	+0.0	0	
10	+0.0	0	
11	+15.0	2	
12	-15.0	6	
13	+0.0	0	
14	+0.0	0	
15	+24.0	7	
16	+REMSUP	8	
17	+STABIN	3	
18	-STABIN	5	
19	-26.0	9	
20	+26.0	1	
21	+0.0	0	
22	+0.0	0	
23	DCAPMOT	4	
24	+CAPMOT	2	

./.

GRP 79 1.861.726.00 <-- <-- <-- CONTINUATION

ELM 2
POWER CONNECTOR (24 PIN MOLEX MALE)

PNT	SIGNAL NAME	COLOR LV TYPE	F
1	+5.6	3	
2	+5.6	3	
3	+5.6SENS	3	
4	TD-C76K	9	
5	+0.0	0	
6	+0.0	0	
7	T-PWRON	5	
8	+0.0	0	
9	+0.0	0	
10	+0.0	0	
11	+15.0	2	
12	-15.0	6	
13	+0.0	0	
14	+0.0	0	
15	+24.0	7	
16	+REMSUP	8	
17	+STABIN	3	
18	-STABIN	5	
19	-26.0	9	
20	+26.0	1	
21	+0.0	0	
22	+0.0	0	
23	DCAPMOT	4	
24	+CAPMOT	2	

./.

GRP 79 1.861.726.00 <-- <-- <-- CONTINUATION

ELM 3
CAGE PWR CONNECTOR (25 PIN D-SUB)

PNT	SIGNAL NAME	COLOR LV TYPE	F
1	+5.6V		
2	+5.6V		
3	+5.6V		
4	+5.6V		
5	+15.0		
6	+15.0		
7	+0.0		
8	+0.0		
9	+0.0		
10	-15.0		
11	-15.0		
12	MONTR1		
13	MONTR2		
14	+5.6V		
15	+5.6V		
16	+5.6V		
17	+15.0		
18	+15.0		
19	+15.0		
20	+0.0		
21	+0.0		
22	-15.0		
23	-15.0		
24	-15.0		
25	MONGND		

./.

WILLI STUDER AG * L O C A T I O N P I N L I S T * 86/12/08 * 10:54 * P A G E 5

1.861.022.00 D82JX PCM RECORDER * 86/08/27 - 00

ASY 1 1.861.310.00 RACK ELECTRONICS <-- <-- <-- CONTINUATION

GRP 73 1.861.583.00 <-- <-- <-- CONTINUATION

ELM 3 1.861.583.00
BOX-RACK 3 (CAGE) (25 PIN D-SUB)

PNT	SIGNAL NAME	COLOR LV TYPE	F
1	BLISYN		
2	WRICLK4		
3	WRIDOUT		
4	WRISYO		
5	DTRI8		
6	DTRI7		
7	DTRI6		
8	DTRI5		
9	DTRI4		
10	DTRI3		
11	DTRI2		
12	DTRI1		
13			
14	BLSYN		
15	WACLK4		
16	WRDOUT		
17	WRSYO		
18	DTR8		
19	DTR7		
20	DTR6		
21	DTR5		
22	DTR4		
23	DTR3		
24	DTR2		
25	DTR1		

GRP 74 1.861.582.00
EXTERNAL PANEL CONNECTOR

ELM 1 1.861.000.00
RACK-CCP/DP (25-PIN D-SUB)

PNT	SIGNAL NAME	COLOR LV TYPE	F
1	DPCBCLK		
2	DPCBAD		
3	DPCBDAT		
4			
5	+0.0		
6	+0.0		
7	+0.0		
8	+0.0		
9	+0.0		
10	+0.0		
11	+0.0		
12	+0.0		
13	+0.0		
14	DPCBICLK		
15	DPCBIAD		
16	DPCBIDAT		
17			
18			
19	+20PC		
20	+20PC		
21	+20PC		
22	+20PC		
23	+20PC		
24	+20PC		
25	+20PC		

GRP 76 1.861.586.00
CUE INPUT/OUTPUT

ELM 1 1.861.586.00
AUX 4 OUTPUT PLUG (XLR MALE)

PNT	SIGNAL NAME	COLOR LV TYPE	F
1	AUX4GNDO	8	
2	AUX4OUT	9	
3	AUX4IOUT	6	

ELM 2 1.861.586.00
AUX 3 OUTPUT PLUG (XLR MALE)

PNT	SIGNAL NAME	COLOR LV TYPE	F
1	AUX3GNDO	8	
2	AUX3OUT	9	
3	AUX3IOUT	6	

ELM 3 1.861.586.00
AUX 3 INPUT PLUG (XLR FEMALE)

PNT	SIGNAL NAME	COLOR LV TYPE	F
1	AUX3GNDI	8	
2	AUX3IN	9	
3	AUX3IIN	6	

ELM 4 1.861.586.00
CUE I/O (CIS 10 FEMALE)

PNT	SIGNAL NAME	COLOR LV TYPE	F
1	AUX4OUT	9	
2	AUX4GNDO	8	
3	AUX4IOUT	6	
4	KEY		
5	AUX3OUT	9	
6	AUX3GNDO	8	
7	AUX3IOUT	6	
8	AUX3IN	9	
9	AUX3GNDI	8	
10	AUX3IIN	6	

PUBLISHED: 12/86

```
*    WILLI STUDER AG    *    L O C A T I O N     P I N     L I S T          * 86/12/08 * 10:54 *  P A G E   7   *
*              1.861.022.00  D820X PCM RECORDER                             * 86/08/27 - 00                      *
ASY  1         1.861.310.00  RACK ELECTRONICS                                                  <--  <--  <--  CONTINUATION

GRP 79         1.861.726.00                    GRP 80         1.861.890.00                    GRP 80         1.861.890.00
               <--  <--  <--  CONTINUATION        BACKPANEL RACK                                               <--  <--  <--  CONTINUATION

ELM  4                                         ELM  1         1.861.816.00                    ELM  1         1.861.816.00
     POWER CONNECTOR RACK (25 PIN D-SUB)            CUE/PQ DELAY                                               <--  <--  <--  CONTINUATION

PNT SIGNAL NAME  COLOR LV TYPE          F      PNT SIGNAL NAME  COLOR LV TYPE          F      PNT SIGNAL NAME  COLOR LV TYPE          F
 1  +5.6                                       1A +0.0                                        16C +15.0
 2  +5.6                                       1B +0.0                                        17A SWTR
 3  +5.6                                       1C +0.0                                        17B
 4  +20PC                                      2A PDCLK3                                      17C SACLK
 5  +20PC                                      2B                                             18A SAH2
 6  +0.0                                       2C PDICLK3                                     18B
 7  +0.0                                       3A                                             18C SAH1
 8  +15.0                                      3B                                             19A
 9  +15.0                                      3C                                             19B
10  -15.0                                      4A AUX3IN                                      19C RES1
11  -15.0                                      4B                                             20A DP1
12  MONTR1                                     4C AUX3IIN                                     20B
13  MONTR2                                     5A ALX3GNDI                                    20C DP0
14  +5.6                                       5B                                             21A DP3
15  +5.6                                       5C                                             21B
16  +20PC                                      6A WRTR11                                      21C DP2
17  +20PC                                      6B                                             22A DP5
18  +0.0                                       6C WRITR11                                     22B
19  +0.0                                       7A                                             22C DP4
20  +15.0                                      7B                                             23A DP7
21  +15.0                                      7C                                             23B
22  -15.0                                      8A                                             23C DP6
23  -15.0                                      8B                                             24A DP9
24  K-PWRUP                                    8C TRENTEST                                    24B
25  MONGND                                     9A                                             24C DP8
                                               9B                                             25A DP11
                                               9C                                             25B
                                               10A                                            25C DP10
                                               10B                                            26A DP13
                                               10C                                            26B
                                               11A PDBCLK                                     26C DP12
                                               11B                                            27A DP15
                                               11C PCIBCLK                                    27B
                                               12A PDWCLK                                     27C DP14
                                               12B                                            28A
                                               12C PCIWCLK                                    28B
                                               13A PDDATA                                     28C RES2
                                               13B                                            29A
                                               13C PCIDATA                                    29B
                                               14A -15.0                                      29C RES3
                                               14B -15.0                                      30A
                                               14C -15.0                                      30B
                                               15A +0.0                                       30C RES4
                                               15B +0.0                                       31A IMON/STF
                                               15C +0.0                                       31B
                                               16A +15.0                                      31C
                                               16B +15.0                                      32A +5.6
                                                                       ./.                                            ./.
```

```
*    WILLI STUDER AG    *    L O C A T I O N     P I N     L I S T          * 86/12/08 * 10:54 *  P A G E   8   *
*              1.861.022.00  D820X PCM RECORDER                             * 86/08/27 - 00                      *
ASY  1         1.861.310.00  RACK ELECTRONICS                                                  <--  <--  <--  CONTINUATION

GRP 80         1.861.890.00                    GRP 80         1.861.890.00                    GRP 80         1.861.890.00
               <--  <--  <--  CONTINUATION                                  <--  <--  <--  CONTINUATION                    <--  <--  <--  CONTINUATION

ELM  1         1.861.816.00                    ELM  2         1.861.811.00                    ELM  2         1.861.811.00
               <--  <--  <--  CONTINUATION        PDM MODULATOR                                              <--  <--  <--  CONTINUATION

PNT SIGNAL NAME  COLOR LV TYPE          F      PNT SIGNAL NAME  COLOR LV TYPE          F      PNT SIGNAL NAME  COLOR LV TYPE          F
32B +5.6                                       1A +0.0                                        16C +15.0
32C +5.6                                       1B +0.0                                        17A SACLK
                                               1C +0.0                                        17B
                                               2A                                             17C SWTR
                                               2B                                             18A SAH1
                                               2C                                             18B
                                               3A                                             18C SAH2
                                               3B                                             19A RES1
                                               3C                                             19B
                                               4A WRTR11                                      19C EMPH
                                               4B                                             20A DP0
                                               4C WRITR11                                     20B
                                               5A WRTR12                                      20C DP1
                                               5B                                             21A DP2
                                               5C WRITR12                                     21B
                                               6A                                             21C DP3
                                               6B                                             22A DP4
                                               6C                                             22B
                                               7A                                             22C DP5
                                               7B                                             23A DP6
                                               7C                                             23B
                                               8A                                             23C DP7
                                               8B                                             24A DP8
                                               8C                                             24B
                                               9A                                             24C DP9
                                               9B                                             25A DP10
                                               9C                                             25B
                                               10A                                            25C DP11
                                               10B                                            26A DP12
                                               10C                                            26B
                                               11A                                            26C DP13
                                               11B                                            27A DP14
                                               11C                                            27B
                                               12A                                            27C DP15
                                               12B                                            28A RES2
                                               12C                                            28B
                                               13A                                            28C RES5
                                               13B                                            29A RES3
                                               13C                                            29B
                                               14A -15.0                                      29C RES6
                                               14B -15.0                                      30A RES4
                                               14C -15.0                                      30B
                                               15A +0.0                                       30C RES7
                                               15B +0.0                                       31A IMON/STF
                                               15C +0.0                                       31B
                                               16A +15.0                                      31C
                                               16B +15.0                                      32A +5.6
                                                                       ./.                                            ./.
```

PUBLISHED: 12/86

```
*   WILLI STUDER AG   *   L O C A T I O N     P I N     L I S T          * 86/12/08 * 10:54 * P A G E  9  *
*                                                                        * 86/08/27 - 00                   *
ASY  1        1.861.310.00  RACK ELECTRONICS                                          <--  <--  <--  CONTINUATION

GRP 80        1.861.890.00
             <--  <--  <--  CONTINUATION

ELM  2        1.861.811.00
             <--  <--  <--  CONTINUATION

PNT SIGNAL NAME  COLOR LV TYPE          F
32B +5.6
32C +5.6
                                                                                                              ./.

GRP 80        1.861.890.00
             <--  <--  <--  CONTINUATION

ELM  3        1.861.812.00
    PDM DEMODULATOR 1

PNT SIGNAL NAME  COLOR LV TYPE          F
 1A +0.0
 1B +0.0
 1C +0.0
 2A
 2B
 2C
 3A
 3B
 3C
 4A PBTR11
 4B
 4C PBITR11
 5A
 5B
 5C
 6A WRTR11
 6B
 6C WRITR11
 7A EEPDM
 7B
 7C
 8A PBTR12
 8B
 8C PBITR12
 9A
 9B
 9C
10A WRTR12
10B
10C WRITR12
11A
11B
11C
12A
12B
12C
13A
13B
13C
14A -15.0
14B -15.0
14C -15.0
15A +0.0
15B +0.0
15C +0.0
16A +15.0
16B +15.0
                                                                                                              ./.

GRP 80        1.861.890.00
             <--  <--  <--  CONTINUATION

ELM  3        1.861.812.00
             <--  <--  <--  CONTINUATION

PNT SIGNAL NAME  COLOR LV TYPE          F
16C +15.0
17A
17B
17C
18A TRACK12
18B
18C TRACK11
19A
19B
19C
20A
20B
20C
21A RES16
21B
21C RES17
22A IAN/PDM
22B
22C HISPD
23A RES8
23B
23C RES9
24A RES10
24B
24C RES11
25A RES12
25B
25C RES13
26A RES14
26B
26C RES15
27A
27B
27C
28A RES5
28B
28C
29A RES6
29B
29C
30A RES7
30B
30C
31A IMON/STE
31B
31C
32A +5.6
                                                                                                              ./.
```

```
*   WILLI STUDER AG   *   L O C A T I O N     P I N     L I S T          * 86/12/08 * 10:54 * P A G E  10 *
*                                                                        * 86/08/27 - 00                   *
ASY  1        1.861.310.00  RACK ELECTRONICS                                          <--  <--  <--  CONTINUATION

GRP 80        1.861.890.00
             <--  <--  <--  CONTINUATION

ELM  3        1.861.812.00
             <--  <--  <--  CONTINUATION

PNT SIGNAL NAME  COLOR LV TYPE          F
32B +5.6
32C +5.6
                                                                                                              ./.

GRP 80        1.861.890.00
             <--  <--  <--  CONTINUATION

ELM  4        1.861.812.00
    PDM DEMODULATOR 2

PNT SIGNAL NAME  COLOR LV TYPE          F
 1A +0.0
 1B +0.0
 1C +0.0
 2A
 2B
 2C
 3A
 3B
 3C
 4A PBTR12
 4B
 4C PBITR12
 5A
 5B
 5C
 6A WRTR12
 6B
 6C WRITR12
 7A EEPDM
 7B
 7C
 8A
 8B
 8C
 9A
 9B
 9C
10A
10B
10C
11A
11B
11C
12A
12B
12C
13A
13B
13C
14A -15.0
14B -15.0
14C -15.0
15A +0.0
15B +0.0
15C +0.0
16A +15.0
16B +15.0
                                                                                                              ./.

GRP 80        1.861.890.00
             <--  <--  <--  CONTINUATION

ELM  4        1.861.812.00
             <--  <--  <--  CONTINUATION

PNT SIGNAL NAME  COLOR LV TYPE          F
16C +15.0
17A
17B
17C
18A TRACK11
18B
18C
19A
19B
19C
20A
20B
20C
21A RES16
21B
21C RES17
22A IAN/PDM
22B
22C HISPD
23A RES9
23B
23C RES8
24A RES11
24B
24C RES10
25A RES13
25B
25C RES12
26A RES15
26B
26C RES14
27A
27B
27C
28A
28B
28C
29A
29B
29C
30A
30B
30C
31A IMON/STE
31B
31C
32A +5.6
                                                                                                              ./.
```

PUBLISHED: 12/86

```
*****************************************************************************************************************
*   WILLI STUDER AG   *   L O C A T I O N   P I N   L I S T                  * 86/12/08 * 10:54 *  P A G E  11  *
*****************************************************************************************************************
*          1.861.022.00  D820X PCM RECORDER                                    * 86/08/27 - 00                    *
*****************************************************************************************************************
ASY  1        1.861.310.00  RACK ELECTRONICS                                                  <--  <--  <--  CONTINUATION

GRP 80        1.861.890.00                  GRP 80        1.861.890.00                  GRP 80        1.861.890.00
             <--  <--  <--  CONTINUATION                  <--  <--  <--  CONTINUATION                  <--  <--  <--  CONTINUATION
=================================================================================================================

ELM  4        1.861.812.00                  ELM  5        1.861.815.00                  ELM  5        1.861.815.00
             <--  <--  <--  CONTINUATION       SPARE 1                                                <--  <--  <--  CONTINUATION
-----------------------------------------------------------------------------------------------------------------
PNT SIGNAL NAME  COLOR LV TYPE          F   PNT SIGNAL NAME  COLOR LV TYPE          F   PNT SIGNAL NAME  COLOR LV TYPE          F
-----------------------------------------------------------------------------------------------------------------
32B +5.6                                     1A +0.0                                     16C +15.0
32C +5.6                                     1B +0.0                                     17A
-----------------------------------------------------------------------------------------------------------------
                                    ./.      1C +0.0                                     17B
                                             2A                                          17C
                                             2B                                          18A
                                             2C                                          18B
                                             3A                                          18C
                                             3B                                          19A
                                             3C                                          19B
                                             4A                                          19C
                                             4B                                          20A
                                             4C                                          20B
                                             5A                                          20C
                                             5B                                          21A
                                             5C                                          21B
                                             6A                                          21C
                                             6B                                          22A
                                             6C                                          22B
                                             7A                                          22C
                                             7B                                          23A
                                             7C                                          23B
                                             8A                                          23C
                                             8B                                          24A
                                             8C                                          24B
                                             9A                                          24C
                                             9B                                          25A
                                             9C                                          25B
                                            10A                                          25C
                                            10B                                          26A
                                            10C                                          26B
                                            11A                                          26C
                                            11B                                          27A
                                            11C                                          27B
                                            12A                                          27C
                                            12B                                          28A
                                            12C                                          28B
                                            13A                                          28C
                                            13B                                          29A
                                            13C                                          29B
                                            14A -15.0                                    29C
                                            14B -15.0                                    30A
                                            14C -15.0                                    30B
                                            15A +0.0                                     30C
                                            15B +0.0                                     31A
                                            15C +0.0                                     31B
                                            16A +15.0                                    31C
                                            16B +15.0                                    32A +5.6
                                                                                 ./.                                 ./.
```

```
*****************************************************************************************************************
*   WILLI STUDER AG   *   L O C A T I O N   P I N   L I S T                  * 86/12/08 * 10:54 *  P A G E  12  *
*****************************************************************************************************************
*          1.861.022.00  D820X PCM RECORDER                                    * 86/08/27 - 00                    *
*****************************************************************************************************************
ASY  1        1.861.310.00  RACK ELECTRONICS                                                  <--  <--  <--  CONTINUATION

GRP 80        1.861.890.00                  GRP 80        1.861.890.00                  GRP 80        1.861.890.00
             <--  <--  <--  CONTINUATION                  <--  <--  <--  CONTINUATION                  <--  <--  <--  CONTINUATION
=================================================================================================================

ELM  5        1.861.815.00                  ELM  6        1.861.814.00                  ELM  6        1.861.814.00
             <--  <--  <--  CONTINUATION       ANALOG ROUTING                                         <--  <--  <--  CONTINUATION
-----------------------------------------------------------------------------------------------------------------
PNT SIGNAL NAME  COLOR LV TYPE          F   PNT SIGNAL NAME  COLOR LV TYPE          F   PNT SIGNAL NAME  COLOR LV TYPE          F
-----------------------------------------------------------------------------------------------------------------
32B +5.6                                     1A +0.0                                     16C +15.0
32C +5.6                                     1B +0.0                                     17A
-----------------------------------------------------------------------------------------------------------------
                                    ./.      1C +0.0                                     17B
                                             2A DACOUT1                                  17C MONTR1
                                             2B                                          18A MONGND
                                             2C GNDDAC1                                  18B
                                             3A DACOUT2                                  18C MONTR2
                                             3B                                          19A TRACK12
                                             3C GNDDAC2                                  19B
                                             4A PBITR1                                   19C TRACK11
                                             4B                                          20A
                                             4C +0.0                                     20B
                                             5A                                          20C
                                             5B                                          21A
                                             5C                                          21B
                                             6A AUX3OUT                                  21C
                                             6B                                          22A
                                             6C AUX3IOUT                                 22B
                                             7A AUX3GNDO                                 22C
                                             7B                                          23A D1
                                             7C AUX4GNDO                                 23B
                                             8A AUX4OUT                                  23C D0
                                             8B                                          24A D3
                                             8C AUX4IOUT                                 24B
                                             9A                                          24C D2
                                             9B                                          25A D5
                                             9C                                          25B
                                            10A                                          25C D4
                                            10B                                          26A D7
                                            10C                                          26B
                                            11A                                          26C D6
                                            11B                                          27A RES19
                                            11C                                          27B
                                            12A                                          27C RES18
                                            12B                                          28A PHOSFLA
                                            12C                                          28B
                                            13A                                          28C PHOSFLB
                                            13B                                          29A CHASFL1
                                            13C                                          29B
                                            14A -15.0                                    29C CHASFL2
                                            14B -15.0                                    30A ICOUT1WR
                                            14C -15.0                                    30B
                                            15A +0.0                                     30C ICOUT2WR
                                            15B +0.0                                     31A
                                            15C +0.0                                     31B
                                            16A +15.0                                    31C
                                            16B +15.0                                    32A +5.6
                                                                                 ./.                                 ./.
```

PUBLISHED: 12/86

```
*****************************************************************************************************************
*   WILLI STUDER AG   *   L O C A T I O N   P I N   L I S T                  * 86/12/08 * 10:54 *  P A G E  13  *
*****************************************************************************************************************
*          1.861.022.00  D820X PCM RECORDER                                    * 86/08/27 - 00                    *
*****************************************************************************************************************
ASY  1        1.861.310.00  RACK ELECTRONICS                                                  <--  <--  <--  CONTINUATION

GRP 80        1.861.890.00
             <--  <--  <--  CONTINUATION
==========================================

ELM  6        1.861.814.00
             <--  <--  <--  CONTINUATION
------------------------------------------
PNT SIGNAL NAME  COLOR LV TYPE          F
------------------------------------------
32B +5.6
32C +5.6
------------------------------------------
                                      ./.
```

```
GRP 80        1.861.890.00
             <--  <--  <--  CONTINUATION
==========================================

ELM  7        1.861.813.00
    PDM CONTROL
------------------------------------------
PNT SIGNAL NAME  COLOR LV TYPE          F
------------------------------------------
 1A +0.0
 1B +0.0
 1C +0.0
 2A CBUSCLK
 2B
 2C CBUSICLK
 3A CBUSAD
 3B
 3C CBUSIAD
 4A CBUSDAT
 4B
 4C CBUSIDAT
 5A
 5B
 5C
 6A DSPA-0
 6B
 6C DSPA-1
 7A DSPA-2
 7B
 7C DSPA-3
 8A DSPA-4
 8B
 8C DSPA-5
 9A DSPA-6
 9B
 9C DSPA-7
10A DSPB-0
10B
10C DSPB-1
11A DSPB-2
11B
11C DSPB-3
12A DSPB-4
12B
12C DSPB-5
13A DSPB-6
13B
13C DSPB-7
14A -15.0
14B -15.0
14C -15.0
15A +0.0
15B +0.0
15C +0.0
16A +15.0
16B +15.0
                                      ./.
```

```
GRP 80        1.861.890.00
             <--  <--  <--  CONTINUATION
==========================================

ELM  7        1.861.813.00
             <--  <--  <--  CONTINUATION
------------------------------------------
PNT SIGNAL NAME  COLOR LV TYPE          F
------------------------------------------
16C +15.0
17A EMPH
17B
17C EEPDM
18A
18B
18C
19A
19B
19C
20A MPSMUTE
20B
20C
21A RES16
21B
21C RES17
22A HISPD
22B
22C IAN/PDM
23A D0
23B
23C D1
24A D2
24B
24C D3
25A D4
25B
25C D5
26A D6
26B
26C D7
27A RES18
27B
27C RES19
28A PHOSELB
28B
28C PHOSELA
29A CHASEL2
29B
29C CHASEL1
30A ICOUT2WR
30B
30C ICOUT1WR
31A
31B
31C IMON/STE
32A +5.6
                                      ./.
```

```
*****************************************************************************************************************
*   WILLI STUDER AG   *   L O C A T I O N   P I N   L I S T                  * 86/12/08 * 10:54 *  P A G E  14  *
*****************************************************************************************************************
*          1.861.022.00  D820X PCM RECORDER                                    * 86/08/27 - 00                    *
*****************************************************************************************************************
ASY  1        1.861.310.00  RACK ELECTRONICS                                                  <--  <--  <--  CONTINUATION

GRP 80        1.861.890.00
             <--  <--  <--  CONTINUATION
==========================================

ELM  7        1.861.813.00
             <--  <--  <--  CONTINUATION
------------------------------------------
PNT SIGNAL NAME  COLOR LV TYPE          F
------------------------------------------
32B +5.6
32C +5.6
------------------------------------------
                                      ./.
```

```
GRP 80        1.861.890.00
             <--  <--  <--  CONTINUATION
==========================================

ELM  8        1.861.817.00
    DISPLAY INTERFACE
------------------------------------------
PNT SIGNAL NAME  COLOR LV TYPE          F
------------------------------------------
 1A +0.0
 1B +0.0
 1C +0.0
 2A CBUSCLK
 2B
 2C CBUSICLK
 3A CBUSAD
 3B
 3C CBUSIAD
 4A CBUSDAT
 4B
 4C CBUSIDAT
 5A
 5B
 5C
 6A
 6B
 6C
 7A
 7B
 7C
 8A
 8B
 8C
 9A
 9B
 9C
10A
10B
10C
11A
11B
11C
12A
12B
12C
13A
13B
13C
14A -15.0
14B -15.0
14C -15.0
15A +0.0
15B +0.0
15C +0.0
16A +15.0
16B +15.0
                                      ./.
```

```
GRP 80        1.861.890.00
             <--  <--  <--  CONTINUATION
==========================================

ELM  8        1.861.817.00
             <--  <--  <--  CONTINUATION
------------------------------------------
PNT SIGNAL NAME  COLOR LV TYPE          F
------------------------------------------
16C +15.0
17A
17B
17C
18A
18B
18C
19A
19B
19C
20A DPCBIDAT
20B
20C DPCBDAT
21A DPCBIAD
21B
21C DPCBAD
22A DPCBICLK
22B
22C DPCBCLK
23A
23B
23C
24A
24B
24C
25A
25B
25C
26A
26B
26C
27A
27B
27C
28A
28B
28C
29A
29B
29C
30A
30B
30C
31A
31B
31C
32A +5.6
                                      ./.
```

PUBLISHED: 12/86

* WILLI STUDER AG * L O C A T I O N P I N L I S T * 86/12/08 * 10:54 * P A G E 15 *

* 1.861.022.00 D820X PCM RECORDER * 86/08/27 - 00 *

ASY 1 1.861.310.00 RACK ELECTRONICS <-- <-- <-- CONTINUATION

GRP 80 1.861.890.00 <-- <-- <-- CONTINUATION

ELM 8 1.861.817.00 <-- <-- <-- CONTINUATION

PNT	SIGNAL NAME	COLOR	LV	TYPE	F
32B	+5.6				
32C	+5.6				

./.

GRP 80 1.861.890.00 <-- <-- <-- CONTINUATION

ELM 9 SPARE 2

PNT	SIGNAL NAME	COLOR	LV	TYPE	F
1A	+0.0				
1B	+0.0				
1C	+0.0				
2A					
2B					
2C					
3A					
3B					
3C					
4A					
4B					
4C					
5A					
5B					
5C					
6A					
6B					
6C					
7A					
7B					
7C					
8A					
8B					
8C					
9A					
9B					
9C					
10A					
10B					
10C					
11A					
11B					
11C					
12A					
12B					
12C					
13A					
13B					
13C					
14A	-15.0				
14B	-15.0				
14C	-15.0				
15A	+0.0				
15B	+0.0				
15C	+0.0				
16A	+15.0				
16B	+15.0				

./.

GRP 80 1.861.890.00 <-- <-- <-- CONTINUATION

ELM 9 <-- <-- <-- CONTINUATION

PNT	SIGNAL NAME	COLOR	LV	TYPE	F
16C	+15.0				
17A					
17B					
17C					
18A					
18B					
18C					
19A					
19B					
19C					
20A					
20B					
20C					
21A					
21B					
21C					
22A					
22B					
22C					
23A					
23B					
23C					
24A					
24B					
24C					
25A					
25B					
25C					
26A					
26B					
26C					
27A					
27B					
27C					
28A					
28B					
28C					
29A					
29B					
29C					
30A					
30B					
30C					
31A					
31B					
31C					
32A	+5.6				

./.

* WILLI STUDER AG * L O C A T I O N P I N L I S T * 86/12/08 * 10:54 * P A G E 16 *

* 1.861.022.00 D820X PCM RECORDER * 86/08/27 - 00 *

ASY 1 1.861.310.00 RACK ELECTRONICS <-- <-- <-- CONTINUATION

GRP 80 1.861.890.00 <-- <-- <-- CONTINUATION

ELM 9 <-- <-- <-- CONTINUATION

PNT	SIGNAL NAME	COLOR	LV	TYPE	F
32B	+5.6				
32C	+5.6				

ELM 12 RACK-CAGE (25 PIN D-SUB)

PNT	SIGNAL NAME	COLOR	LV	TYPE	F
1	CBUSIDAT				
2	CBUSIAD				
3	CBUSICLK				
4					
5					
6	WRITR1				
7	WRITR2				
8	WRITR11				
9	WRITR12				
10	PBITR1				
11	PBITR2				
12	PBITR11				
13	PBITR12				
14	CBUSDAT				
15	CBUSAD				
16	CBUSCLK				
17					
18	WRTR1				
19	WRTR2				
20	WRTR11				
21	WRTR12				
22	PBTR1				
23	PBTR2				
24	PBTR11				
25	PBTR12				

./.

GRP 80 1.861.890.00 <-- <-- <-- CONTINUATION

ELM 13 RACK PWR CONNECTOR (25 PIN D-SUB)

PNT	SIGNAL NAME	COLOR	LV	TYPE	F
1	+5.6				
2	+5.6				
3	+5.6				
4	+20PC				
5	+20PC				
6	+0.0				
7	+0.0				
8	+15.0				
9	+15.0				
10	-15.0				
11	-15.0				
12	MONTR1				
13	MONTR2				
14	+5.6				
15	+5.6				
16	+20PC				
17	+20PC				
18	+0.0				
19	+0.0				
20	+15.0				
21	+15.0				
22	-15.0				
23	-15.0				
24	K-PWRUP				
25	MCNGND				

./.

GRP 80 1.861.890.00 <-- <-- <-- CONTINUATION

ELM 14 BOX-RACK 1 TO REAR PANEL TO

PNT	SIGNAL NAME	COLOR	LV	TYPE	F
1	DACOUT1				
2	DACOUT2				
3	PDIBCLK				
4	PDIWCLK				
5	PDIDATA				
6	TIREFINT				
7	TIREFEXT				
8	WRITR1				
9	WRITR2				
10	PBITR1				
11	PBITR2				
12	PDICLK3				
13	PDCLK3				
14	GNDDAC1				
15	GNDDAC2				
16	PDBCLK				
17	PDWCLK				
18	PDDATA				
19	TREFINT				
20	TREFEXT				
21	WRTR1				
22	WRTR2				
23	PBTR1				
24	PBTR2				
25	K-PWRUP				

./.

PUBLISHED: 12/86

WILLI STUDER AG * L O C A T I O N P I N L I S T * 86/12/08 * 10:54 * P A G E 17 *

* 1.861.022.00 D820X PCM RECORDER * 86/08/27 - 00 *

ASY 1 1.861.310.00 RACK ELECTRONICS <-- <-- <-- CONTINUATION

GRP 80 1.861.890.00 <-- <-- <-- CONTINUATION

ELM 15 1.861.583.00
BOX-RACK 2 TO REAR PANEL TD

PNT	SIGNAL NAME	COLOR	LV	TYPE	F
1	SSDA1CLK				
2	SSDA1DTR				
3	SSDA1MTX				
4	SSDA1MRX				
5	SSDA1CTS				
6	CBUS1CLK				
7	CBUS1AD				
8	CBUS1DAT				
9					
10	+0V-				
11	+0V-				
12	+0V-				
13	+0V-				
14	SSDACLK				
15	SSDADTR				
16	SSDAMTX				
17	SSDAMRX				
18	SSDACTS				
19	CBUSCLK				
20	CBUSAD				
21	CBUSDAT				
22	+20PC				
23	+20PC				
24	+20PC				
25	+20PC				

./.

GRP 80 1.861.890.00 <-- <-- <-- CONTINUATION

ELM 16
RACK-CUE I/O (25 PIN D-SUB)

PNT	SIGNAL NAME	COLOR	LV	TYPE	F
1	AUX4CLT	9			
2	AUX4IOUT	6			
3	AUX3OUT	9			
4	AUX3IOUT	6			
5	AUX3IN	9			
6	AUX3IIN	6			
7					
8					
9					
10					
11					
12					
13					
14	AUX4GNDO	4			
15					
16	AUX3GNDO	4			
17					
18	AUX3GNDI	4			
19					
20					
21					
22					
23					
24					
25					

./.

GRP 80 1.861.890.00 <-- <-- <-- CONTINUATION

ELM 17
SIGNAL QUALITY DISPL.(25 PIN D-SUB)

PNT	SIGNAL NAME	COLOR	LV	TYPE	F
1	+5.6				
2	+5.6				
3	+5.6				
4	DSPB-7				
5	DSPB-5				
6	DSPB-3				
7	DSPB-1				
8	DSPA-0				
9	DSPA-2				
10	DSPA-4				
11	DSPA-6				
12	+0.0				
13	+0.0				
14	+5.6				
15	+5.6				
16	+5.6				
17	DSPB-6				
18	DSPB-4				
19	DSPB-2				
20	DSPB-0				
21	DSPA-1				
22	DSPA-3				
23	DSPA-5				
24	DSPA-7				
25	+0.0				

./.

WILLI STUDER AG * L O C A T I O N P I N L I S T * 86/12/08 * 10:54 * P A G E 18 *

* 1.861.022.00 D820X PCM RECORDER * 86/08/27 - 00 *

ASY 1 1.861.310.00 RACK ELECTRONICS <-- <-- <-- CONTINUATION

GRP 80 1.861.890.00 <-- <-- <-- CONTINUATION

ELM 18
DISPLAY PANEL/CCP (25 PIN D-SUB)

PNT	SIGNAL NAME	COLOR	LV	TYPE	F
1	DPCBCLK				
2	DPCBAD				
3	DPCBDAT				
4					
5					
6	+0.0				
7	+0.0				
8	+0.0				
9	+0.0				
10	+0.0				
11	+0.0				
12	+0.0				
13	+0.0				
14	DPCB1CLK				
15	DPCB1AD				
16	DPCB1DAT				
17					
18					
19	+20PC				
20	+20PC				
21	+20PC				
22	+20PC				
23	+20PC				
24	+20PC				
25	+20PC				

./.

GRP 80 1.861.890.00 <-- <-- <-- CONTINUATION

ELM 19
RACK-MONITOR PANEL (D-SUB CRIMP)

PNT	SIGNAL NAME	COLOR	LV	TYPE	F
1	DPCBCLK	2			
2	DPCBAD	7			
3	DPCBDAT	8			
4	MPSMUTE	4			
5	+0.0	0			
6	+0.0	0			
7	+5.6	2			
8	+5.6	2			
9	+15.0	3			
10	+15.0	3			
11	+15.0	3			
12	MCNTR1	9			
13	MCNTR2	6			
14	DPCBICLK	4			
15	DPCBIAD	9			
16	DPCBIDAT	5			
17	+0.0	0			
18	+0.0	0			
19	+5.6	2			
20	+5.6	2			
21	+5.6	2			
22	-15.0	1			
23	-15.0	1			
24	-15.0	1			
25	MONGND	4			

./.

GRP 80 1.861.890.00 <-- <-- <-- CONTINUATION

ELM 21
RACK-TAPE DECK (SERVO)(26 PIN FLAT)

PNT	SIGNAL NAME	COLOR	LV	TYPE	F
1	+0.0				
2	TD-MVCLK				
3	+0.0				
4	TD-MVDIR				
5	+0.0				
6					
7	+0.0				
8	TREFINT				
9	+0.0				
10	TIREFINT				
11	+0.0				
12	TREFEXT				
13	+0.0				
14	TIREFEXT				
15	+0.0				
16					
17	+0.0				
18					
19	+0.0				
20					
21	+0.0				
22					
23	+0.0				
24					
25	+0.0				
26					

./.

PUBLISHED: 12/86

```
*****************************************************************************************************************
*    WILLI STUDER AG    *    L  O  C  A  T  I  O  N     P  I  N     L  I  S  T          *  86/12/08  *  10:54  *   P A G E  19   *
*****************************************************************************************************************
*              1.861.022.00  D820X PCM RECORDER                                          *  86/08/27 - 00                    *
*****************************************************************************************************************
ASY  1          1.861.310.00  RACK ELECTRONICS                                                    <--  <--  <--  CONTINUATION

GRP 80          1.861.890.00
               <--  <--  <--  CONTINUATION
=====================================

ELM 22
    RACK-TAPE DECK (SSDA) (26 PIN FLAT)
-------------------------------------
PNT SIGNAL NAME  COLOR LV TYPE          F
-------------------------------------
 1  +0.0
 2  TAD-RESA
 3  +0.0
 4  TAD-RESB
 5  +0.0
 6  TAD-RESC
 7  +0.0
 8  SSDACLK
 9  +0.0
10  SSDAICLK
11  +0.0
12  SSDAMTX
13  +0.0
14  SSDAIMTX
15  +0.0
16  SSDADTR
17  +0.0
18  SSDAIDTR
19  +0.0
20  SSDACTS
21  +0.0
22  SSDAICTS
23  +0.0
24  SSDAMRX
25  +0.0
26  SSDAIMRX
-------------------------------------
```

```
*****************************************************************************************************************
*    WILLI STUDER AG    *    L  O  C  A  T  I  O  N     P  I  N     L  I  S  T          *  86/12/08  *  10:54  *   P A G E  20   *
*****************************************************************************************************************
*              1.861.022.00  D820X PCM RECORDER                                          *  86/08/27 - 00                    *
*****************************************************************************************************************
ASY  2          1.861.300.00  CAGE ELECTRONICS

GRP  1          1.861.895.00
    BACKPANEL CAGE
=====================================

ELM  1          1.861.895.00
    REARPANEL TD (BOX)        (D-SUB 25P)
-------------------------------------
PNT SIGNAL NAME  COLOR LV TYPE          F
-------------------------------------
 1  BLISYN
 2  WRICLK4
 3  WRIDOUT
 4  WRISYO
 5  DTRI8
 6  DTRI7
 7  DTRI6
 8  DTRI5
 9  DTRI4
10  DTRI3
11  DTRI2
12  DTRI1
13
14  BLSYN
15  WRCLK4
16  WRDOUT
17  WRSYO
18  DTR8
19  DTR7
20  DTR6
21  DTR5
22  DTR4
23  DTR3
24  DTR2
25  DTR1
-------------------------------------
                                    ./.
```

```
GRP  1          1.861.895.00
               <--  <--  <--  CONTINUATION
=====================================

ELM  2          1.861.895.00
    POWER DELTA MOLEX (P2)  (D-SUB 25P)
-------------------------------------
PNT SIGNAL NAME  COLOR LV TYPE          F
-------------------------------------
 1  +5.6V
 2  +5.6V
 3  +5.6V
 4  +5.6V
 5  +15.0
 6  +15.0
 7  +0.0
 8  +0.0
 9  +0.0
10  -15.0
11  -15.0
12  MONTR1
13  MONTR2
14  +5.6V
15  +5.6V
16  +5.6V
17  +15.0
18  +15.0
19  +15.0
20  +0.0
21  +0.0
22  -15.0
23  -15.0
24  -15.0
25  MONGND
-------------------------------------
                                    ./.
```

```
GRP  1          1.861.895.00
               <--  <--  <--  CONTINUATION
=====================================

ELM  3          1.861.895.00
    BACKPANEL RACK            (D-SUB 25P)
-------------------------------------
PNT SIGNAL NAME  COLOR LV TYPE          F
-------------------------------------
 1  CBUSIDAT
 2  CBUSIAD
 3  CBUSICLK
 4
 5
 6  WRITR1
 7  WRITR2
 8  WRITR11
 9  WRITR12
10  PBITR1
11  PBITR2
12  PBITR11
13  PBITR12
14  CBUSDAT
15  CBUSAD
16  CBUSCLK
17
18  WRTR1
19  WRTR2
20  WRTR11
21  WRTR12
22  PBTR1
23  PBTR2
24  PBTR11
25  PBTR12
-------------------------------------
                                    ./.
```

PUBLISHED: 12/86

```
*****************************************************************************************************************
*   WILLI STUDER AG   *   L O C A T I O N   P I N   L I S T                  * 86/12/08 * 10:54 *  P A G E  21  *
*****************************************************************************************************************
*              1.861.022.00  D820X PCM RECORDER                                 * 86/08/27 - 00                  *
*****************************************************************************************************************
ASY  2          1.861.300.00  CAGE ELECTRONICS                                                  <--  <--  <--  CONTINUATION

GRP  1          1.861.895.00                  GRP  1          1.861.895.00                  GRP  1          1.861.895.00
               <--  <--  <--  CONTINUATION                  <--  <--  <--  CONTINUATION                  <--  <--  <--  CONTINUATION
=================================================================================================================================

ELM  4          1.861.804.00                  ELM  4          1.861.804.00                  ELM  4          1.861.804.00
    DETECTOR                                                  <--  <--  <--  CONTINUATION                  <--  <--  <--  CONTINUATION
---------------------------------------------------------------------------------------------------------------------------------
PNT SIGNAL NAME  COLOR LV TYPE          F     PNT SIGNAL NAME  COLOR LV TYPE          F     PNT SIGNAL NAME  COLOR LV TYPE          F
---------------------------------------------------------------------------------------------------------------------------------
 1A PBTR4                                     16C +10                                      32B +5.6V
 1B                                           17A DTR5                                     32C +5.6V
 1C PBTR3                                     17B                                                                          ./.
 2A PBTR6                                     17C DTRI5
 2B                                           18A DTR6
 2C PBTR5                                     18B
 3A PBTR8                                     18C DTRI6
 3B                                           19A DTR7
 3C PBTR7                                     19B
 4A PBTR10                                    19C DTRI7
 4B                                           20A DTR8
 4C PBTR9                                     20B
 5A TDMPRES                                   20C DTRI8
 5B                                           21A CBUSCLK
 5C                                           21B
 6A WRTR4                                     21C CBUSICLK
 6B                                           22A CBUSAD
 6C WRTR3                                     22B
 7A WRTR6                                     22C CBUSIAD
 7B                                           23A CBUSDAT
 7C WRTR5                                     23B
 8A WRTR8                                     23C CBUSIDAT
 8B                                           24A UREC
 8C WRTR7                                     24B SPARE51
 9A WRTR10                                    24C MON1
 9B                                           25A MON2
 9C WRTR9                                     25B SPARE52
10A DTR1                                      25C MON3
10B                                           26A MON4
10C DTRI1                                     26B C3
11A DTR2                                      26C MON5
11B                                           27A IREC1
11C DTRI2                                     27B C2
12A DTR3                                      27C IREC2
12B                                           28A IRECD1
12C DTRI3                                     28B C1
13A DTR4                                      28C IRECD2
13B                                           29A IREC11
13C DTRI4                                     29B C0
14A -10                                       29C IREC12
14B -10                                       30A IMASSA
14C -10                                       30B HISPD
15A +0.0                                      30C SPARE50
15B +0.0                                      31A SPARE53
15C +0.0                                      31B TCMOD
16A +10                                       31C ITDSMUTE
16B +10                                       32A +5.6V
                                                                                                                                ./.
```

```
*****************************************************************************************************************
*   WILLI STUDER AG   *   L O C A T I O N   P I N   L I S T                  * 86/12/08 * 10:54 *  P A G E  22  *
*****************************************************************************************************************
*              1.861.022.00  D820X PCM RECORDER                                 * 86/08/27 - 00                  *
*****************************************************************************************************************
ASY  2          1.861.300.00  CAGE ELECTRONICS                                                  <--  <--  <--  CONTINUATION

GRP  1          1.861.895.00                  GRP  1          1.861.895.00                  GRP  1          1.861.895.00
               <--  <--  <--  CONTINUATION                  <--  <--  <--  CONTINUATION                  <--  <--  <--  CONTINUATION
=================================================================================================================================

ELM  5          1.861.803.00                  ELM  5          1.861.803.00                  ELM  5          1.861.803.00
    WRITE AMPLIFIER                                           <--  <--  <--  CONTINUATION                  <--  <--  <--  CONTINUATION
---------------------------------------------------------------------------------------------------------------------------------
PNT SIGNAL NAME  COLOR LV TYPE          F     PNT SIGNAL NAME  COLOR LV TYPE          F     PNT SIGNAL NAME  COLOR LV TYPE          F
---------------------------------------------------------------------------------------------------------------------------------
 1A                                           16C +10                                      32B +5.6V
 1B                                           17A WRSYC                                    32C +5.6V
 1C                                           17B                                                                          ./.
 2A WRTR1                                     17C WRISYC
 2B                                           18A WRDOUT
 2C WRITR1                                    18B
 3A WRTR2                                     18C WRIDOUT
 3B                                           19A WRCLK4
 3C WRITR2                                    19B
 4A WRTR11                                    19C WRICLK4
 4B                                           20A BLSYN
 4C WRITR11                                   20B
 5A WRTR12                                    20C BLISYN
 5B                                           21A
 5C WRITR12                                   21B
 6A WRTR3                                     21C
 6B                                           22A
 6C WRTR4                                     22B
 7A WRTR5                                     22C
 7B                                           23A
 7C WRTR6                                     23B
 8A WRTR7                                     23C
 8B                                           24A
 8C WRTR8                                     24B
 9A WRTR9                                     24C UREC
 9B                                           25A
 9C WRTR10                                    25B
10A                                           25C
10B                                           26A
10C                                           26B
11A                                           26C
11B                                           27A IREC2
11C                                           27B
12A                                           27C IREC1
12B                                           28A IRECD2
12C                                           28B
13A                                           28C IRECD1
13B                                           29A IREC12
13C                                           29B
14A -10                                       29C IREC11
14B -10                                       30A SPARE50
14C -10                                       30B
15A +0.0                                      30C IMASSA
15B +0.0                                      31A
15C +0.0                                      31B
16A +10                                       31C SPARE53
16B +10                                       32A +5.6V
                                                                                                                                ./.
```

PUBLISHED: 12/86

```
*   WILLI STUDER AG   *   L O C A T I O N   P I N   L I S T   *  86/12/08  *  10:54  *   P A G E  23   *
*                 1.861.022.00  D820X PCM RECORDER                                  *  86/08/27 - 00                 *
ASY  2          1.861.300.00  CAGE ELECTRONICS                                                  <--  <--  <--  CONTINUATION

GRP  1          1.861.895.00                GRP  1          1.861.895.00                GRP  1          1.861.895.00
               <--  <--  <--  CONTINUATION                 <--  <--  <--  CONTINUATION                 <--  <--  <--  CONTINUATION

ELM  6          1.861.802.00                ELM  6          1.861.802.00                ELM  6          1.861.802.00
    TAPE DECK MONITOR                                       <--  <--  <--  CONTINUATION                 <--  <--  <--  CONTINUATION

PNT SIGNAL NAME  COLOR LV TYPE          F   PNT SIGNAL NAME  COLOR LV TYPE          F   PNT SIGNAL NAME  COLOR LV TYPE          F
 1A                                         16C +10                                    32B +5.6V
 1B                                         17A +15.0                                  32C +5.6V
 1C                                         17B +15.0                                                                  ./.
 2A                                         17C +15.0
 2B                                         18A MCNTR1
 2C                                         18B
 3A                                         18C MONGND
 3B                                         19A MCNTR2
 3C                                         19B
 4A                                         19C
 4B                                         20A
 4C                                         20B
 5A TDMPRES                                 20C
 5B                                         21A
 5C                                         21B
 6A                                         21C
 6B                                         22A
 6C                                         22B
 7A                                         22C
 7B                                         23A
 7C                                         23B
 8A                                         23C
 8B                                         24A MON1
 8C                                         24B
 9A                                         24C
 9B                                         25A MON3
 9C                                         25B
10A                                         25C MCN2
10B                                         26A MCN5
10C                                         26B
11A                                         26C MCN4
11B                                         27A
11C                                         27B
12A                                         27C
12B                                         28A
12C                                         28B
13A -15.0                                   28C
13B -15.0                                   29A
13C -15.0                                   29B
14A -10                                     29C
14B -10                                     30A
14C -10                                     30B
15A +0.0                                    30C
15B +0.0                                    31A ITDSMUTE
15C +0.0                                    31B
16A +10                                     31C
16B +10                                     32A +5.6V
                                  ./.                                       ./.
```

```
*   WILLI STUDER AG   *   L O C A T I O N   P I N   L I S T   *  86/12/08  *  10:54  *   P A G E  24   *
*                 1.861.022.00  D820X PCM RECORDER                                  *  86/08/27 - 00                 *
ASY  2          1.861.300.00  CAGE ELECTRONICS                                                  <--  <--  <--  CONTINUATION

GRP  1          1.861.895.00                GRP  1          1.861.895.00                GRP  1          1.861.895.00
               <--  <--  <--  CONTINUATION                 <--  <--  <--  CONTINUATION                 <--  <--  <--  CONTINUATION

ELM  7          1.861.801.00                ELM  7          1.861.801.00                ELM  7          1.861.801.00
    PLAYBACK AMPLIFIER                                      <--  <--  <--  CONTINUATION                 <--  <--  <--  CONTINUATION

PNT SIGNAL NAME  COLOR LV TYPE          F   PNT SIGNAL NAME  COLOR LV TYPE          F   PNT SIGNAL NAME  COLOR LV TYPE          F
 1A PBTR3                                   16C +10                                    32B +5.6V
 1B                                         17A +15.0                                  32C +5.6V
 1C PBTR4                                   17B +15.0
 2A PBTR5                                   17C +15.0
 2B                                         18A PBTR1
 2C PBTR6                                   18B
 3A PBTR7                                   18C PBITR1
 3B                                         19A PBTR2
 3C PBTR8                                   19B
 4A PBTR9                                   19C PBITR2
 4B                                         20A PBTR11
 4C PBTR10                                  20B
 5A                                         20C PBITR11
 5B                                         21A PBTR12
 5C                                         21B
 6A                                         21C PBITR12
 6B                                         22A
 6C                                         22B
 7A                                         22C
 7B                                         23A
 7C                                         23B
 8A                                         23C
 8B                                         24A
 8C                                         24B SPARE51
 9A                                         24C
 9B                                         25A
 9C                                         25B SPARE52
10A                                         25C
10B                                         26A
10C                                         26B C3
11A                                         26C
11B                                         27A
11C                                         27B C2
12A                                         27C
12B                                         28A
12C                                         28B C1
13A -15.0                                   28C
13B -15.0                                   29A
13C -15.0                                   29B C0
14A -10                                     29C
14B -10                                     30A
14C -10                                     30B HISPD
15A +0.0                                    30C
15B +0.0                                    31A
15C +0.0                                    31B TCMOD
16A +10                                     31C
16B +10                                     32A +5.6V
                                  ./.                                       ./.
```

PUBLISHED: 12/86

* WILLI STUDER AG * L O C A T I O N P I N L I S T * 86/12/08 * 10:54 * P A G E 25 *
* 1.861.022.00 D820X PCM RECORDER * 86/08/27 - 00 *
ASY 2 1.861.300.00 CAGE ELECTRONICS <-- <-- <-- CONTINUATION

GRP 2 1.861.803.00
HEADBLOCK CONNECTOR WRITE

ELM 1 1.861.803.00
HEADBLOCK WRITE (P4) (D-SUB 25P)

PNT	SIGNAL NAME	COLOR	LV	TYPE	F
1	WRTOUT1				
2	IWROUT1				
3	WRTOUT2				
4	IWROUT2				
5	WRTOUT3				
6	IWROUT3				
7	WRTOUT4				
8	IWROUT4				
9	WRTOUT5				
10	IWROUT5				
11	WRTOUT6				
12	IWROUT6				
13	WRTOUT7				
14	IWROUT7				
15	WRTOUT8				
16	IWROUT8				
17	WRTOUT9				
18	IWROUT9				
19	WRTOUT10				
20	IWROUT10				
21					
22					
23	WRTOUT11				
24	IWROUT11				
25	WRTOUT12				
26	IWROUT12				

GRP 3 1.861.801.00
HEADBLOCK CONNECTOR READ

ELM 1 1.861.801.00
HEADBLOCK READ (P4) (D-SUB 25P)

PNT	SIGNAL NAME	COLOR	LV	TYPE	F
1	HDTR5				
2	HDTR9				
3	HDTR7				
4	HDTR3				
5	HDTR4				
6	HDTR8				
7	HDTR10				
8	HDTR6				
9	HDTR1				
10	HDTR11				
11	HDTR12				
12	HDTR2				
13	+10				
14	+10				
15	+10				
16	+10				
17	+10				
18	+0.0				
19	+0.0				
20	+0.0				
21	+0.0				
22	-10				
23	-10				
24	-10				
25	-10				

GRP 4 1.861.802.00
TAPE DECK MONITOR CONNECTORS

ELM 1 1.861.802.00
INTERNAL SPEAKER CONNECTOR J1 (CIS)

PNT	SIGNAL NAME	COLOR	LV	TYPE	F
1	TDSPE1				
2	TDSP1GND				
3	TDSPE1				

ELM 2 1.861.802.00
INTERNAL PHONE CONNECTOR J2 (CIS)

PNT	SIGNAL NAME	COLOR	LV	TYPE	F
1	+0.0				
2	PHOCON				
3					
4	TDPHO1				
5	TDPHO2				
6	+0.0				

* WILLI STUDER AG * L O C A T I O N P I N L I S T * 86/12/08 * 10:54 * P A G E 26 *
* 1.861.022.00 D820X PCM RECORDER * 86/08/27 - 00 *
ASY 2 1.861.300.00 CAGE ELECTRONICS <-- <-- <-- CONTINUATION

GRP 5 71.01.0108
INTERNAL SPEAKER

ELM 1 71.010.108.00
INTERNAL SPEAKER (SOLD.)

PNT	SIGNAL NAME	COLOR	LV	TYPE	F
1	TDSPE1				
2	TDSP1GND				

GRP 6 54.24.0102
INTERNAL PHONE PLUG

ELM 1 54.240.102.00
INTERNAL PHONE PLUG (SOLD.)

PNT	SIGNAL NAME	COLOR	LV	TYPE	F
1	TDPHO1				
2	TDPHO2				
3	+0.0				
4					
5					
6	PHOCON				

* WILLI STUDER AG * L O C A T I O N P I N L I S T * 86/12/08 * 10:54 * P A G E 27 *
* 1.861.022.00 D820X PCM RECORDER * 86/08/27 - 00 *
ASY 3 1.861.350.00 PANELS (VERSION D820X-MCD)

GRP 1 1.861.742.00
DISPLAY PANEL PROCESSOR (DP PROC)

ELM 1 1.861.742.00
CBUS CCP TRANSCEIVER (D-SUB 25P F)

PNT	SIGNAL NAME	COLOR	LV	TYPE	F
1	DPCBCLK				
2	DPCBAD				
3	DPCBDAT				
4					
5	+0.0				
6	+0.0				
7	+0.0				
8	+0.0				
9	+0.0				
10	+0.0				
11	+0.0				
12	+0.0				
13	+0.0				
14	DPCBICLK				
15	DPCBIAD				
16	DPCBIDAT				
17					
18					
19	+20PC				
20	+20PC				
21	+20PC				
22	+20PC				
23	+20PC				
24	+20PC				
25	+20PC				

./.

GRP 1 1.861.742.00 <-- <-- <-- CONTINUATION

ELM 2 1.861.742.00
DATA DP KEYBOARD (FLATCABLE 26P)

PNT	SIGNAL NAME	COLOR	LV	TYPE	F
1	DPD0				
2	+5.0				
3	DPD1				
4	+5.0				
5	DPD2				
6	+5.0				
7	DPD3				
8	+5.0				
9	DPD4				
10	+5.0				
11	DPD5				
12	+5.0				
13	DPD6				
14	+0.0				
15	DPD7				
16	+0.0				
17	DPKEYS				
18	+0.0				
19	D-WRITE				
20	+0.0				
21	DPMODE				
22	+0.0				
23					
24	+0.0				
25					
26	+0.0				

GRP 2 1.861.744.00
CHANNEL CONTROL PANEL TRANSCEIVER

ELM 1 1.861.744.00
BUS REARPANEL TO (D-SUB 25P M)

PNT	SIGNAL NAME	COLOR	LV	TYPE	F
1	DPCBCLK				
2	DPCBAD				
3	DPCBDAT				
4					
5	+0.0				
6	+0.0				
7	+0.0				
8	+0.0				
9	+0.0				
10	+0.0				
11	+0.0				
12	+0.0				
13	+0.0				
14	DPCBICLK				
15	DPCBIAD				
16	DPCBIDAT				
17					
18					
19	+20PC				
20	+20PC				
21	+20PC				
22	+20PC				
23	+20PC				
24	+20PC				
25	+20PC				

./.

PUBLISHED: 12/86

```
*****************************************************************************************************************
*   WILLI STUDER AG   *   L O C A T I O N   P I N   L I S T                  * 86/12/08 * 10:54 *  P A G E  28  *
*****************************************************************************************************************
*          1.861.022.00  D820X PCM RECORDER                                    * 86/08/27 - 00                    *
*****************************************************************************************************************
ASY  3        1.861.350.00  PANELS (VERSION D820X-MCD)                                          <--  <--  <--  CONTINUATION

GRP  2        1.861.744.00
              <--  <--  <--  CONTINUATION
==========================================

ELM  2        1.861.744.00
    CBUS DP PROCESSOR      (D-SUB 25P F)
----------------------------------------
PNT SIGNAL NAME  COLOR LV TYPE          F
----------------------------------------
 1  DPCBCLK
 2  DPCBAD
 3  DPCBDAT
 4
 5  +0.0
 6  +0.0
 7  +0.0
 8  +0.0
 9  +0.0
10  +0.0
11  +0.0
12  +0.0
13  +0.0
14  DPCBICLK
15  DPCBIAD
16  DPCBIDAT
17
18
19  +20PC
20  +20PC
21  +20PC
22  +20PC
23  +20PC
24  +20PC
25  +20PC
----------------------------------------
                                    ./.

GRP  2        1.861.744.00
              <--  <--  <--  CONTINUATION
==========================================

ELM  3        1.861.744.00
    DATA CCP KEYBOARD      (FLTCAB. 26P)
----------------------------------------
PNT SIGNAL NAME  COLOR LV TYPE          F
----------------------------------------
 1
 2
 3
 4  SBITC
 5  SBIT1
 6  SBIT2
 7  SBIT3
 8  SBIT4
 9  SBIT5
10  SBIT6
11  SBIT7
12  SBY2
13  SBY1
14  SBYC
15  LBITC
16  LBIT1
17  LBIT2
18  LBIT3
19  LBIT4
20  LBIT5
21  LBIT6
22  LBIT7
23
24  LBY2
25  LBY1
26  LBYC
----------------------------------------

ELM  4        1.861.744.00
    POWER CCP KEYBOARD  (FLATCABEL 10P)
----------------------------------------
PNT SIGNAL NAME  COLOR LV TYPE          F
----------------------------------------
 1  +0.0
 2  +5.0
 3  +0.0
 4  +5.0
 5  +0.0
 6  +5.0
 7  +0.0
 8  +5.0
 9  +0.0
10  +5.0
----------------------------------------

GRP  3        1.861.746.00
    MONITOR PANEL AMPLIFIER (MP AMP)
==========================================

ELM  1        1.861.744.00
    CBUS REARPANEL RACK    (D-SUB 25P M)
----------------------------------------
PNT SIGNAL NAME  COLOR LV TYPE          F
----------------------------------------
 1  DPCBCLK
 2  DPCBAD
 3  DPCBDAT
 4  MPSMUTE
 5  +0.0
 6  +0.0
 7  +5.6
 8  +5.6
 9  +15.0
10  +15.0
11  +15.0
12  MONTR2
13  MONTR1
14  DPCBICLK
15  DPCBIAD
16  DPCBIDAT
17  +0.0
18  +0.0
19  +5.6
19  KMCUE1
20  +5.6
21  +5.6
22  -15.0
23  -15.0
24  -15.0
25  MONGND
----------------------------------------

ELM  2        1.861.746.00
    AUDIO SPEAKER RIGHT      (CIS 3P) J3
----------------------------------------
PNT SIGNAL NAME  COLOR LV TYPE          F
----------------------------------------
 1  CODE
 2  MPSPR2        0
 3  MPSPR1        2
----------------------------------------
                                    ./.
```

```
*****************************************************************************************************************
*   WILLI STUDER AG   *   L O C A T I O N   P I N   L I S T                  * 86/12/08 * 10:54 *  P A G E  29  *
*****************************************************************************************************************
*          1.861.022.00  D820X PCM RECORDER                                    * 86/08/27 - 00                    *
*****************************************************************************************************************
ASY  3        1.861.350.00  PANELS (VERSION D820X-MCD)                                          <--  <--  <--  CONTINUATION

GRP  3        1.861.746.00
              <--  <--  <--  CONTINUATION
==========================================

ELM  3        1.861.746.00
    AUDIO SPEAKER LEFT       (CIS 5P) J4
----------------------------------------
PNT SIGNAL NAME  COLOR LV TYPE          F
----------------------------------------
 1  SWITCH        1
 2  CODE
 3  MPSPL1        2
 4  MPSPL2        0
 5  SWITCGND      1
----------------------------------------

ELM  4        1.861.746.00
    AUDIO PHONES PLUG        (CIS 6P) J2
----------------------------------------
PNT SIGNAL NAME  COLOR LV TYPE          F
----------------------------------------
 1  CODE
 2  PHOSW         5
 3  CODE
 4  PHOL          9
 5  PHOR          2
 6  PHOGND        4
----------------------------------------

ELM  5        1.912.001.30
    TO TANDEM POT            (CIS 6P) J1
----------------------------------------
PNT SIGNAL NAME  COLOR LV TYPE          F
----------------------------------------
 1  TANTR2
 2  TAVAR2
 3  MONGND
 4  CODE
 5  TAVAR1
 6  TANTR1
----------------------------------------
                                    ./.

GRP  3        1.861.746.00
              <--  <--  <--  CONTINUATION
==========================================

ELM  6        1.861.746.00
    DATA MP KEYBOARD     (FLATCABLE 26P)
----------------------------------------
PNT SIGNAL NAME  COLOR LV TYPE          F
----------------------------------------
 1  +0.0
 2  BMCAUX
 3  +0.0
 4  BMCUE2
 5
 6  BMCMIX
 7
 8  BMCUE1
 9
10  BMCCH2
11
12  BMCCH1
13
14  BMCTAP
15  MCPRES
16  BMCINP
17  KMCUE2
18  KINTAP
19  KMCUE1
20  KMCCH1
21
22  KMCCH2
23  +5.0
24
25  +5.0
26  KMCTC
----------------------------------------

GRP  4        71.01.0108
    SPEAKER RIGHT
==========================================

ELM  1        71.01.0108
    SPEAKER RIGHT
----------------------------------------
PNT SIGNAL NAME  COLOR LV TYPE          F
----------------------------------------
 1  MPSPR1        2
 2  MPSPR2        0
----------------------------------------
```

PUBLISHED: 12/86

* WILLI STUDER AG * L O C A T I O N P I N L I S T * 86/12/08 * 10:54 * P A G E 30 *
* 1.861.022.00 D820X PCM RECORDER * 86/08/27 - 00 *
ASY 3 1.861.350.00 PANELS (VERSION D820X-MCD) <-- <-- <-- CONTINUATION

GRP 5 71.01.0108
SPEAKER LEFT

ELM 1 71.01.0108
SPEAKER LEFT

PNT	SIGNAL NAME	COLOR LV TYPE	F
1	MPSPL1	2	
2	MPSPL2	0	

GRP 6 54.24.0102
PHONES PLUG

ELM 1 54.24.0102
PHONES PLUG

PNT	SIGNAL NAME	COLOR LV TYPE	F
2	PHOSW	5	
4	PHOL	9	
5	PHOR	2	
6	PHOGND	4	

GRP 7 1.912.0C1.30
TANDEM POTENTIOMETER

ELM 1 1.912.0C1.30
TANDEM POT SOLD.

PNT	SIGNAL NAME	COLOR LV TYPE	F
1	TANTR1		
2	TAVAR1		
3	MONGND		
4	TAVAR2		
5	TANTR2		
6	MONGND		

* WILLI STUDER AG * L O C A T I O N P I N L I S T * 86/12/08 * 10:54 * P A G E 31 *
* 1.861.022.00 D820X PCM RECORDER * 86/08/27 - 00 *
ASY 3 1.861.350.00 PANELS (VERSION D820X-MCD) <-- <-- <-- CONTINUATION

GRP 8 1.861.745.00
MONITOR PANEL KEYBOARD(MP KYB)

ELM 1 1.861.745.00
DATA MP AMPLIF (FLATCAB. SOLD. 26P)

PNT	SIGNAL NAME	COLOR LV TYPE	F
1	+0.0		
2	BMCAUX		
3	+0.0		
4	BMCUE2		
5			
6	BMCMIX		
7			
8	BMCUE1		
9			
10	BMCCH2		
11			
12	BMCCH1		
13			
14	BMCTAP		
15	MCPRES		
16	BMCINP		
17	KMCUE2		
18	KINTAP		
20	KMCCH1		
21			
22	KMCCH2		
23	+5.0		
24			
25	+5.0		
26	KMCTC		

GRP 9 1.861.741.00
DISPLAY PANEL KEYBOARD (DP KYB)

ELM 1 1.861.741.00
DATA DP PROC (FLATCAB. SOLD. 26P.)

PNT	SIGNAL NAME	COLOR LV TYPE	F
1	DPDC		
2	+5.0		
3	DPD1		
4	+5.0		
5	DPD2		
6	+5.0		
7	DPD3		
8	+5.0		
9	DPD4		
10	+5.0		
11	DPD5		
12	+5.0		
13	DPD6		
14	+0.0		
15	DPD7		
16	+0.0		
17	DPKEYS		
18	+0.0		
19	D-WRITE		
20	+0.0		
21	DPMODE		
22	+0.0		
23			
24	+0.0		
25			
26	+0.0		

GRP 10 1.861.743.00
CHANNEL CONTROL PANEL KEYBOARD

ELM 1 1.861.743.00
DATA CCP TRANSCEIV. (FLATCABLE 26P)

PNT	SIGNAL NAME	COLOR LV TYPE	F
1			
2			
3			
4	SBIT0		
5	SBIT1		
6	SBIT2		
7	SBIT3		
8	SBIT4		
9	SBIT5		
10	SBIT6		
11	SBIT7		
12	SBY2		
13	SBY1		
14	SBY0		
15	LBIT0		
16	LBIT1		
17	LBIT2		
18	LBIT3		
19	LBIT4		
20	LBIT5		
21	LBIT6		
22	LBIT7		
23			
24	LBY2		
25	LBY1		
26	LBY0		

ELM 2 1.861.744.00
POWER CCP TRANSC. (FLTCAB.SOLD.10P)

PNT	SIGNAL NAME	COLOR LV TYPE	F
1	+0.0		
2	+5.0		
3	+0.0		
4	+5.0		
5	+0.0		
6	+5.0		
7	+0.0		
8	+5.0		
9	+0.0		
10	+5.0		

PUBLISHED: 12/86

```
*****************************************************************************************************************
*   WILLI STUDER AG   *   L O C A T I O N   P I N   L I S T                  * 86/12/08 * 10:54 * P A G E 32 *
*****************************************************************************************************************
*            1.861.022.00  D820X PCM RECORDER                                  * 86/08/27 - 00                  *
*****************************************************************************************************************
ASY  4        1.861.320.00  ELECTRONICS BOX

GRP  1        1.861.885.00                  GRP  1        1.861.885.00                  GRP  1        1.861.885.00
    BACKPANEL BOX                                        <--  <--  <--  CONTINUATION                  <--  <--  <--  CONTINUATION
=====================================      ==================================      ==================================

ELM  1        1.861.751.00                  ELM  1        1.861.751.00                  ELM  1        1.861.751.00
    ANALOG OUTPUT                                        <--  <--  <--  CONTINUATION                  <--  <--  <--  CONTINUATION
-----------------------------------------   -----------------------------------------   -----------------------------------------
PNT SIGNAL NAME  COLOR LV TYPE          F   PNT SIGNAL NAME  COLOR LV TYPE          F   PNT SIGNAL NAME  COLOR LV TYPE          F
-----------------------------------------   -----------------------------------------   -----------------------------------------
 1A +0V-                                    16C                                        32B +0V-
 1B +0V-                                    17A ANAOUT-2                               32C +0V-
 1C +0V-                                    17B GNDOUT-2                               ----------------------------------------
 2A +0V-                                    17C ANAIOUT2                                                                  ./.
 2B +0V-                                    18A
 2C +0V-                                    18B DACOUT2
 3A +0V-                                    18C GNDDAC2
 3B +0V-                                    19A ANA-GND
 3C +0V-                                    19B ANA-GND
 4A                                         19C ANA-GND
 4B                                         20A ANA-GND
 4C                                         20B
 5A +5V-                                    20C
 5B +5V-                                    21A +20
 5C +5V-                                    21B +20
 6A +5V-                                    21C +20
 6B +5V-                                    22A CBUSCLK
 6C +5V-                                    22B CBUSICLK
 7A DABCDA1                                 22C
 7B DAIBCDA1                                23A CBUSAD
 7C                                         23B CBUSIAD
 8A                                         23C
 8B                                         24A CBUSDAT
 8C                                         24B CBUSIDAT
 9A                                         24C
 9B FLEM                                    25A
 9C                                         25B
10A DA96FS                                  25C
10B DAI96FS                                 26A
10C                                         26B
11A -20                                     26C
11B -20                                     27A +5V-
11C -20                                     27B +5V-
12A                                         27C +5V-
12B DDIDIGMU                                28A +5V-
12C                                         28B +5V-
13A ANA-GND                                 28C +5V-
13B ANA-GND                                 29A DADAT21
13C ANA-GND                                 29B DAIDAT21
14A GNDDAC1                                 29C
14B DACOUT1                                 30A DADAT11
14C                                         30B DAIDAT11
15A ANAOUT-1                                30C
15B GNDOUT-1                                31A DAVAL1A
15C ANAIOUT1                                31B DAIVAL1A
16A                                         31C
16B                                         32A +0V-
                                    ./.                                     ./.

*****************************************************************************************************************
*   WILLI STUDER AG   *   L O C A T I O N   P I N   L I S T                  * 86/12/08 * 10:54 * P A G E 33 *
*****************************************************************************************************************
*            1.861.022.00  D820X PCM RECORDER                                  * 86/08/27 - 00                  *
*****************************************************************************************************************
ASY  4        1.861.320.00  ELECTRONICS BOX                                                  <--  <--  <--  CONTINUATION

GRP  1        1.861.885.00                  GRP  1        1.861.885.00                  GRP  1        1.861.885.00
             <--  <--  <--  CONTINUATION                  <--  <--  <--  CONTINUATION                  <--  <--  <--  CONTINUATION
=====================================      ==================================      ==================================

ELM  2        1.861.752.00                  ELM  2        1.861.752.00                  ELM  2        1.861.752.00
    ANALOG INPUT                                         <--  <--  <--  CONTINUATION                  <--  <--  <--  CONTINUATION
-----------------------------------------   -----------------------------------------   -----------------------------------------
PNT SIGNAL NAME  COLOR LV TYPE          F   PNT SIGNAL NAME  COLOR LV TYPE          F   PNT SIGNAL NAME  COLOR LV TYPE          F
-----------------------------------------   -----------------------------------------   -----------------------------------------
 1A +0V-                                    16C                                        32B +0V-
 1B +0V-                                    17A ANAIN-2                                32C +0V-
 1C +0V-                                    17B GNDIN-2                                ----------------------------------------
 2A +0V-                                    17C ANAIIN-2                                                                  ./.
 2B +0V-                                    18A
 2C +0V-                                    18B
 3A +0V-                                    18C
 3B +0V-                                    19A ANA-GND
 3C +0V-                                    19B ANA-GND
 4A                                         19C ANA-GND
 4B                                         20A
 4C FLEM                                    20B
 5A +5V-                                    20C
 5B +5V-                                    21A +20
 5C +5V-                                    21B +20
 6A +5V-                                    21C +20
 6B +5V-                                    22A CBUSCLK
 6C +5V-                                    22B CBUSICLK
 7A ADBCLKA                                 22C
 7B                                         23A CBUSAD
 7C ADIBCLKA                                23B CBUSIAD
 8A ADSTART                                 23C
 8B                                         24A CBUSDAT
 8C ADISTART                                24B CBUSIDAT
 9A DITHER                                  24C
 9B                                         25A ADCCLIP1
 9C                                         25B
10A                                         25C ADCCLIP2
10B                                         26A
10C                                         26B
11A -20                                     26C
11B -20                                     27A +5V-
11C -20                                     27B +5V-
12A                                         27C +5V-
12B                                         28A +5V-
12C                                         28B +5V-
13A ANA-GND                                 28C +5V-
13B ANA-GND                                 29A ADDAT2
13C ANA-GND                                 29B ADIDAT2
14A                                         29C
14B                                         30A ADDAT1
14C                                         30B ADIDAT1
15A ANAIN-1                                 30C
15B GNDIN-1                                 31A ADVALID
15C ANAIIN-1                                31B ADIVALID
16A                                         31C
16B                                         32A +0V-
                                    ./.                                     ./.
```

PUBLISHED: 12/86

```
*****************************************************************************************************************
*   WILLI STUDER AG   *   L O C A T I O N   P I N   L I S T                  * 86/12/08 * 10:54 * P A G E 34 *
*****************************************************************************************************************
*            1.861.022.00  D820X PCM RECORDER                                  * 86/08/27 - 00                  *
*****************************************************************************************************************
ASY  4        1.861.320.00  ELECTRONICS BOX                                                  <--  <--  <--  CONTINUATION

GRP  1        1.861.885.00                  GRP  1        1.861.885.00                  GRP  1        1.861.885.00
             <--  <--  <--  CONTINUATION                 <--  <--  <--  CONTINUATION                 <--  <--  <--  CONTINUATION
=====================================      =====================================      =====================================

ELM  3                                     ELM  3                                     ELM  3
    SPARE 1                                              <--  <--  <--  CONTINUATION                 <--  <--  <--  CONTINUATION
-------------------------------------------------------------------------------------------------------------------------
PNT SIGNAL NAME  COLOR LV TYPE          F   PNT SIGNAL NAME  COLOR LV TYPE          F   PNT SIGNAL NAME  COLOR LV TYPE          F
-------------------------------------------------------------------------------------------------------------------------
 1A +0V-                                    16C                                        32B +0V-
 1B +0V-                                    17A                                        32C +0V-
 1C +0V-                                    17B                                        ------------------------------------
 2A +0V-                                    17C                                                                    ./.
 2B +0V-                                    18A CBUSCLK
 2C +0V-                                    18B CBUSICLK
 3A +0V-                                    18C CBUSAD
 3B +0V-                                    19A CBUSIAD
 3C +0V-                                    19B CBUSDAT
 4A                                         19C CBUSIDAT
 4B                                         20A
 4C                                         20B
 5A +5V-                                    20C
 5B +5V-                                    21A
 5C +5V-                                    21B
 6A +5V-                                    21C
 6B +5V-                                    22A
 6C +5V-                                    22B
 7A                                         22C
 7B                                         23A
 7C                                         23B
 8A                                         23C
 8B                                         24A
 8C                                         24B
 9A                                         24C
 9B                                         25A
 9C                                         25B
10A                                         25C
10B                                         26A
10C                                         26B
11A                                         26C
11B                                         27A +5V-
11C                                         27B +5V-
12A                                         27C +5V-
12B                                         28A +5V-
12C                                         28B +5V-
13A                                         28C +5V-
13B                                         29A
13C                                         29B
14A                                         29C
14B                                         30A +0V-
14C                                         30B +0V-
15A                                         30C +0V-
15B                                         31A +0V-
15C                                         31B +0V-
16A                                         31C +0V-
16B                                         32A +0V-
                                                                                                                ./.
                                                                                                                ./.
```

```
*****************************************************************************************************************
*   WILLI STUDER AG   *   L O C A T I O N   P I N   L I S T                  * 86/12/08 * 10:54 * P A G E 35 *
*****************************************************************************************************************
*            1.861.022.00  D820X PCM RECORDER                                  * 86/08/27 - 00                  *
*****************************************************************************************************************
ASY  4        1.861.320.00  ELECTRONICS BOX                                                  <--  <--  <--  CONTINUATION

GRP  1        1.861.885.00                  GRP  1        1.861.885.00                  GRP  1        1.861.885.00
             <--  <--  <--  CONTINUATION                 <--  <--  <--  CONTINUATION                 <--  <--  <--  CONTINUATION
=====================================      =====================================      =====================================

ELM  4        1.861.853.00                  ELM  4        1.861.853.00                  ELM  4        1.861.853.00
    GAINS CONTROL                                        <--  <--  <--  CONTINUATION                 <--  <--  <--  CONTINUATION
-------------------------------------------------------------------------------------------------------------------------
PNT SIGNAL NAME  COLOR LV TYPE          F   PNT SIGNAL NAME  COLOR LV TYPE          F   PNT SIGNAL NAME  COLOR LV TYPE          F
-------------------------------------------------------------------------------------------------------------------------
 1A +0V-                                    16C DDC3                                   32B +0V-
 1B +0V-                                    17A DDLCLK10                               32C +0V-
 1C +0V-                                    17B DDLCLK11                               ------------------------------------
 2A +0V-                                    17C DDHPCFF                                                            ./.
 2B +0V-                                    18A CBUSCLK
 2C +0V-                                    18B CBUSICLK
 3A +0V-                                    18C CBUSAD
 3B +0V-                                    19A CBUSIAD
 3C +0V-                                    19B CBUSDAT
 4A DDFADD1                                 19C CBUSIDAT
 4B DDFADD0                                 20A DDIDIGMU
 4C DDIFVAL                                 20B SPARE55
 5A +5V-                                    20C
 5B +5V-                                    21A DDMUTE
 5C +5V-                                    21B SPLINIT
 6A +5V-                                    21C RES3
 6B +5V-                                    22A -20
 6C +5V-                                    22B
 7A DDBCLK                                  22C SECSYN
 7B CHAESB                                  23A ICARRY
 7C DDBSYNIN                                23B BSYNCOUT
 8A                                         23C +20
 8B DDDATAG1                                24A RES4
 8C DDCLKG1                                 24B RES5
 9A DDLCLK1                                 24C ADCCLIP1
 9B                                         25A CLK4
 9C                                         25B ADCCLIP2
10A DDGRDY1                                 25C RES8
10B DDPROA9                                 26A RES9
10C                                         26B RES10
11A DDPROA0                                 26C RES11
11B DDPROA1                                 27A +5V-
11C DDPROA2                                 27B +5V-
12A DDPROA3                                 27C +5V-
12B DDPROA4                                 28A +5V-
12C DDPROA5                                 28B +5V-
13A DDPROA6                                 28C +5V-
13B DDPROA7                                 29A FLEM
13C DDPROA8                                 29B RES12
14A DDCHPRO                                 29C DCINIT
14B                                         30A +0V-
14C AESIIN                                  30B +0V-
15A DDATAAES                                30C +0V-
15B DDCK2AES                                31A +0V-
15C DDCHSTAT                                31B +0V-
16A                                         31C +0V-
16B AESIN                                   32A +0V-
                                                                                                                ./.
                                                                                                                ./.
```

PUBLISHED: 12/86

```
*    WILLI STUDER AG    *    L O C A T I O N    P I N    L I S T          * 86/12/08 * 10:54 *  P A G E  36  *
*                1.861.022.00  D820X PCM RECORDER                          * 86/08/27 - 00                     *
ASY  4          1.861.320.00  ELECTRONICS BOX                                          <--  <--  <--  CONTINUATION

GRP  1          1.861.885.00                    GRP  1          1.861.885.00                    GRP  1          1.861.885.00
                <--  <--  <--  CONTINUATION                     <--  <--  <--  CONTINUATION                     <--  <--  <--  CONTINUATION

ELM  5          1.861.854.00                    ELM  5          1.861.854.00                    ELM  5          1.861.854.00
     DAPRO INTERFACE                                                 <--  <--  <--  CONTINUATION                <--  <--  <--  CONTINUATION

PNT SIGNAL NAME  COLOR LV TYPE          F       PNT SIGNAL NAME  COLOR LV TYPE          F       PNT SIGNAL NAME  COLOR LV TYPE          F
 1A +0V-                                        16C ADICAT1                                     32B +0V-
 1B +0V-                                        17A ADDAT2                                      32C +0V-
 1C +0V-                                        17B ADIDAT2                                                                          ./.
 2A +0V-                                        17C AESIN
 2B +0V-                                        18A DDLCLK10
 2C +0V-                                        18B DDLCLK11
 3A +0V-                                        18C PULLUP11
 3B +0V-                                        19A
 3C +0V-                                        19B
 4A                                             19C DCIDAVAL
 4B                                             20A SPLINIT
 4C DDCHPRO                                     20B PDDATA
 5A +5V-                                        20C PDIDATA
 5B +5V-                                        21A PDWCLK
 5C +5V-                                        21B PDIWCLK
 6A +5V-                                        21C PDBCLK
 6B +5V-                                        22A PDIBCLK
 6C +5V-                                        22B DCENCDAP
 7A DDFADD1                                     22C
 7B DDFADD0                                     23A ICARRY
 7C DDIFVAL                                     23B BSYNCOUT
 8A DDBCLK                                      23C AESO1
 8B CHAESB                                      24A AESIC1
 8C DDBSYNIN                                    24B AESIN
 9A DDATAAES                                    24C AESIIN
 9B DDCK2AES                                    25A CLK4
 9C DDCHSTAT                                    25B CLK5
10A DA96FS                                      25C 2ECCLK
10B DAI96FS                                     26A I2ECCLK
10C DDISTART                                    26B
11A DAVAL1A                                     26C
11B DAIVAL1A                                    27A +5V-
11C DABCDA1                                     27B +5V-
12A DAIBCDA1                                    27C +5V-
12B DADAT11                                     28A +5V-
12C DAIDAT11                                    28B +5V-
13A DADAT21                                     28C +5V-
13B DAIDAT21                                    29A
13C AESIIN                                      29B
14A DDCHPRO                                     29C PULLUP12
14B ADVALID                                     30A +0V-
14C ADIVALID                                    30B +0V-
15A ADBCLKA                                     30C +0V-
15B ADIBCLKA                                    31A +0V-
15C ADSTART                                     31B +0V-
16A ADISTART                                    31C +0V-
16B ADDAT1                                      32A +0V-
                ./.                                             ./.

*    WILLI STUDER AG    *    L O C A T I O N    P I N    L I S T          * 86/12/08 * 10:54 *  P A G E  37  *
*                1.861.022.00  D820X PCM RECORDER                          * 86/08/27 - 00                     *
ASY  4          1.861.320.00  ELECTRONICS BOX                                          <--  <--  <--  CONTINUATION

GRP  1          1.861.885.00                    GRP  1          1.861.885.00                    GRP  1          1.861.885.00
                <--  <--  <--  CONTINUATION                     <--  <--  <--  CONTINUATION                     <--  <--  <--  CONTINUATION

ELM  6          1.861.855.00                    ELM  6          1.861.855.00                    ELM  6          1.861.855.00
     DATA PROCESSOR                                                  <--  <--  <--  CONTINUATION                <--  <--  <--  CONTINUATION

PNT SIGNAL NAME  COLOR LV TYPE          F       PNT SIGNAL NAME  COLOR LV TYPE          F       PNT SIGNAL NAME  COLOR LV TYPE          F
 1A +0V-                                        16C DDC3                                        32B +0V-
 1B +0V-                                        17A                                             32C +0V-
 1C +0V-                                        17B                                                                                  ./.
 2A +0V-                                        17C DDHPOFF
 2B +0V-                                        18A DDLCLK10
 2C +0V-                                        18B DDLCLK11
 3A +0V-                                        18C
 3B +0V-                                        19A
 3C +0V-                                        19B
 4A RES15                                       19C
 4B RES16                                       20A SPLINIT
 4C RES17                                       20B SPARE55
 5A +5V-                                        20C
 5B +5V-                                        21A DDMUTE
 5C +5V-                                        21B
 6A +5V-                                        21C RES3
 6B +5V-                                        22A ADCCLIP1
 6C +5V-                                        22B RES4
 7A RES18                                       22C ADCCLIP2
 7B RES19                                       23A DCINVAL
 7C RES20                                       23B DCFMUT
 8A RES21                                       23C DCFSPL
 8B                                             24A RES5
 8C                                             24B ADCCLIP1
 9A                                             24C ADCCLIP2
 9B                                             25A CLK4
 9C DD3HEAD                                     25B
10A                                             25C
10B DDPROA9                                     26A
10C DDISTART                                    26B
11A DDPROA0                                     26C
11B DDPROA1                                     27A +5V-
11C DDPROA2                                     27B +5V-
12A DDPROA3                                     27C +5V-
12B DDPROA4                                     28A +5V-
12C DDPROA5                                     28B +5V-
13A DDPROA6                                     28C +5V-
13B DDPROA7                                     29A DCINIT
13C DDPROA8                                     29B
14A DDCHPRO                                     29C
14B DDFGAI                                      30A +0V-
14C DDB1D14                                     30B +0V-
15A DDB2D13                                     30C +0V-
15B DDB2D14                                     31A +0V-
15C DDB2D15                                     31B +0V-
16A DDMIEN1                                     31C +0V-
16B DDCLRQ                                      32A +0V-
                ./.                                             ./.
```

PUBLISHED: 12/86

WILLI STUDER AG * L O C A T I O N P I N L I S T * 86/12/08 * 10:54 * P A G E 38 *

1.861.022.00 D820X PCM RECORDER * 86/08/27 - 00 *

ASY 4 1.861.320.00 ELECTRONICS BOX <-- <-- <-- CONTINUATION

GRP 1 1.861.885.00 <-- <-- <-- CONTINUATION

ELM 7 1.861.856.00
COEFFICIENT GENERATOR

PNT	SIGNAL NAME	CCLCR	LV	TYPE	F
1A	+0V-				
1B	+0V-				
1C	+0V-				
2A	+0V-				
2B	+0V-				
2C	+0V-				
3A	+0V-				
3B	+0V-				
3C	+0V-				
4A	RES15				
4B	RES16				
4C	RES17				
5A	+5V-				
5B	+5V-				
5C	+5V-				
6A	+5V-				
6B	+5V-				
6C	+5V-				
7A	RES18				
7B	RES19				
7C	RES20				
8A	RES21				
8B	DDDATAG1				
8C	DDCLKG1				
9A	DDLCLK1				
9B					
9C	DD3HEAD				
10A	DDGRDY1				
10B	DDPROA9				
10C	PULLUP9				
11A	DDPROA0				
11B	DDPROA1				
11C	DDPROA2				
12A	DDPROA3				
12B	DDPROA4				
12C	DDPROA5				
13A	DDPROA6				
13B	DDPROA7				
13C	DDPROA8				
14A	DDCHPRO				
14B	DDFGAI				
14C	DDB1D14				
15A	DDB2D13				
15B	DDB2D14				
15C	DDB2D15				
16A	DDMIEN1				
16B	DDCLRG				
16C					
17A					
17B					
17C					
18A					
18B					
18C					
19A	DCD1CLK				
19B	DCD2CLK				
19C					
20A					
20B					
20C					
21A					
21B					
21C					
22A					
22B					
22C	DCDAPDEC				
23A					
23B					
23C	RES22				
24A					
24B					
24C					
25A	CLK4				
25B	CLK5				
25C					
26A					
26B					
26C					
27A	+5V-				
27B	+5V-				
27C	+5V-				
28A	+5V-				
28B	+5V-				
28C	+5V-				
29A					
29B					
29C					
30A	+0V-				
30B	+0V-				
30C	+0V-				
31A	+0V-				
31B	+0V-				
31C	+0V-				
32A	+0V-				
32B	+0V-				
32C	+0V-				

./.

WILLI STUDER AG * L O C A T I O N P I N L I S T * 86/12/08 * 10:54 * P A G E 39 *

1.861.022.00 D820X PCM RECORDER * 86/08/27 - 00 *

ASY 4 1.861.320.00 ELECTRONICS BOX <-- <-- <-- CONTINUATION

GRP 1 1.861.885.00 <-- <-- <-- CONTINUATION

ELM 8 1.861.857.00
CODEC CONTROL

PNT	SIGNAL NAME	CCLCR	LV	TYPE	F
1A	+0V-				
1B	+0V-				
1C	+0V-				
2A	+0V-				
2B	+0V-				
2C	+0V-				
3A	+0V-				
3B	+0V-				
3C	+0V-				
4A	CCAL0				
4B	CCAL1				
4C	CCAL2				
5A	+5V-				
5B	+5V-				
5C	+5V-				
6A	+5V-				
6B	+5V-				
6C	+5V-				
7A	CCAL3				
7B	CCAL4				
7C	CCAL5				
8A	CCAL6				
8B	CCAL7				
8C	CCIR5				
9A	CCAH1				
9B	CCAH2				
9C	CCAH3				
10A	CCAH4				
10B	CCAH5				
10C	CCAH6				
11A	CCAH7				
11B	CCADEC				
11C	CCPR-1				
12A	CC0				
12B	CC1				
12C	CC2				
13A	CC3				
13B	CC4				
13C	CC5				
14A	CC6				
14B	CC7				
14C	CCE1				
15A	CCE0				
15B	CCECD				
15C	CCILV				
16A	CCQECD				
16B	CCQECDM				
16C	CCCRC				
17A	DCD1CLK				
17B	DCD2CLK				
17C	DCINIT				
18A	CBUSCLK				
18B	CBUSICLK				
18C	CBUSAD				
19A	CBUSIAD				
19B	CBUSDAT				
19C	CBUSIDAT				
20A	CCREPRO				
20B	CCADDRDE				
20C	CCENCIN				
21A	CCFBCLR				
21B	CLK5				
21C	CCWDERR				
22A	CCK5				
22B	TCY-4				
22C	ISPLDET				
23A	CCIDIS				
23B	DCFMUT				
23C	DCFSPL				
24A	CCIGMASK				
24B	CCIPRSPL				
24C	TCRCERR				
25A	CLK6				
25B	CLK7				
25C	CLK8				
26A	CLK9				
26B	CCRDERR				
26C	CCWRERR				
27A	+5V-				
27B	+5V-				
27C	+5V-				
28A	+5V-				
28B	+5V-				
28C	+5V-				
29A	CCEEC				
29B	CCEE1				
29C	CCBLCRC				
30A	+0V-				
30B	+0V-				
30C	+0V-				
31A	+0V-				
31B	+0V-				
31C	+0V-				
32A	+0V-				
32B	+0V-				
32C	+0V-				

./.

PUBLISHED: 12/86

```
*    WILLI STUDER AG    *    L O C A T I O N     P I N     L I S T              * 86/12/08 *  10:54  *   P A G E  40   *
*                1.861.022.00  D820X PCM RECORDER                                * 86/08/27 - 00                          *
ASY  4          1.861.320.00  ELECTRONICS BOX                                                  <--  <--  <--  CONTINUATION

GRP  1          1.861.885.00                    GRP  1          1.861.885.00                    GRP  1          1.861.885.00
                <--  <--  <--  CONTINUATION                     <--  <--  <--  CONTINUATION                     <--  <--  <--  CONTINUATION

ELM  9          1.861.858.00                    ELM  9          1.861.858.00                    ELM  9          1.861.858.00
     CODEC MEMORY                                                <--  <--  <--  CONTINUATION                     <--  <--  <--  CONTINUATION

PNT SIGNAL NAME  CCLOR LV TYPE          F       PNT SIGNAL NAME  CCLOR LV TYPE          F       PNT SIGNAL NAME  CCLOR LV TYPE          F
 1A +0V-                                        16C CCCRC                                      32B +0V-
 1B +0V-                                        17A ISPLDET                                    32C +0V-
 1C +0V-                                        17B CCIGMASK                                                                          ./.
 2A +0V-                                        17C DCICAVAL
 2B +0V-                                        18A
 2C +0V-                                        18B
 3A +0V-                                        18C
 3B +0V-                                        19A
 3C +0V-                                        19B
 4A CCAL0                                       19C
 4B CCAL1                                       20A CCREPRO
 4C CCAL2                                       20B CCADDRDE
 5A +5V-                                        20C CCENCIN
 5B +5V-                                        21A CCFBCLR
 5C +5V-                                        21B
 6A +5V-                                        21C CCWDERR
 6B +5V-                                        22A CCK5
 6C +5V-                                        22B DCENCDAP
 7A CCAL3                                       22C DCDAPDEC
 7B CCAL4                                       23A DCINVAL
 7C CCAL5                                       23B CCIDIS
 8A CCAL6                                       23C RES22
 8B CCAL7                                       24A TFORMENC
 8C CCIR5                                       24B TDECCASY
 9A CCAH1                                       24C CCIPRSPL
 9B CCAH2                                       25A CLK6
 9C CCAH3                                       25B CLK7
10A CCAH4                                       25C CLK8
10B CCAH5                                       26A CLK9
10C CCAH6                                       26B CCRDERR
11A CCAH7                                       26C CCWRERR
11B CCADEC                                      27A +5V-
11C CCPR-1                                      27B +5V-
12A CC0                                         27C +5V-
12B CC1                                         28A +5V-
12C CC2                                         28B +5V-
13A CC3                                         28C +5V-
13B CC4                                         29A CCEEC
13C CC5                                         29B CCEE1
14A CC6                                         29C CCBLCRC
14B CC7                                         30A +0V-
14C CCE1                                        30B +0V-
15A CCE0                                        30C +0V-
15B CCECD                                       31A +0V-
15C CCILV                                       31B +0V-
16A CCQECD                                      31C +0V-
16B CCQECDM                                     32A +0V-
                ./.                                             ./.
```

```
*    WILLI STUDER AG    *    L O C A T I O N     P I N     L I S T              * 86/12/08 *  10:54  *   P A G E  41   *
*                1.861.022.00  D820X PCM RECORDER                                * 86/08/27 - 00                          *
ASY  4          1.861.320.00  ELECTRONICS BOX                                                  <--  <--  <--  CONTINUATION

GRP  1          1.861.885.00                    GRP  1          1.861.885.00                    GRP  1          1.861.885.00
                <--  <--  <--  CONTINUATION                     <--  <--  <--  CONTINUATION                     <--  <--  <--  CONTINUATION

ELM 10          1.861.859.00                    ELM 10          1.861.859.00                    ELM 10          1.861.859.00
    TRANSFORMATTER                                               <--  <--  <--  CONTINUATION                     <--  <--  <--  CONTINUATION

PNT SIGNAL NAME  CCLOR LV TYPE          F       PNT SIGNAL NAME  CCLOR LV TYPE          F       PNT SIGNAL NAME  CCLOR LV TYPE          F
 1A +0V-                                        16C FBIWS                                      32B +0V-
 1B +0V-                                        17A ADT0                                       32C +0V-
 1C +0V-                                        17B                                                                                   ./.
 2A +0V-                                        17C ADT1
 2B +0V-                                        18A ADT2
 2C +0V-                                        18B
 3A +0V-                                        18C ADT3
 3B +0V-                                        19A HI/LC
 3C +0V-                                        19B SECSYN
 4A ITEST                                       19C
 4B IERRL                                       20A DINT
 4C                                             20B ISYNC
 5A +5V-                                        20C IWRET
 5B +5V-                                        21A TFORMENC
 5C +5V-                                        21B TDECCASY
 6A +5V-                                        21C TCRCERR
 6B +5V-                                        22A
 6C +5V-                                        22B TCY-4
 7A WRCLK4                                      22C ISPLDET
 7B WRICLK4                                     23A
 7C SLR                                         23B
 8A WRDOUT                                      23C
 8B WRIDOUT                                     24A
 8C RTSYNC                                      24B
 9A WRSYO                                       24C
 9B WRISYO                                      25A CLK1
 9C ISYRT                                       25B CLK4
10A TREFINT                                     25C CLK5
10B TIREFINT                                    26A CLK6
10C DSSY                                        26B ICLK5
11A                                             26C ICLK6
11B                                             27A +5V-
11C RESHPG1                                     27B +5V-
12A RESHPG2                                     27C +5V-
12B TTWREMPH                                    28A +5V-
12C TTRDEMPH                                    28B +5V-
13A TTIXLOOP                                    28C +5V-
13B TTREC                                       29A BLSYN
13C SECSYN                                      29B
14A W0                                          29C BLISYN
14B W1                                          30A +0V-
14C F1                                          30B +0V-
15A F2                                          30C +0V-
15B F3                                          31A +0V-
15C ITRAR                                       31B +0V-
16A FBWS                                        31C +0V-
16B                                             32A +0V-
                ./.                                             ./.
```

PUBLISHED: 12/86

```
*****************************************************************************************************************
*   WILLI STUDER AG   *   L O C A T I O N   P I N   L I S T                  *  86/12/08  *  10:54  *   P A G E  42   *
*****************************************************************************************************************
*           1.861.022.00  D820X PCM RECORDER                                   *  86/08/27 - 00                    *
*****************************************************************************************************************
ASY  4        1.861.320.00  ELECTRONICS BOX                                                  <--  <--  <--  CONTINUATION

GRP  1        1.861.885.00                                                                  1.861.885.00
              <--  <--  <--  CONTINUATION                                                    <--  <--  <--  CONTINUATION
==========================================                                                  ==========================================

ELM 11        1.861.860.00                                                                  1.861.860.00
    RUN PROCESSOR                                                                           <--  <--  <--  CONTINUATION
------------------------------------------                                                  ------------------------------------------
PNT SIGNAL NAME  COLOR LV TYPE          F                                                   PNT SIGNAL NAME  COLOR LV TYPE          F
------------------------------------------                                                  ------------------------------------------
 1A +0V-                                                                                    32B +0V-
 1B +0V-                                                                                    32C +0V-
 1C +0V-                                                                                    ------------------------------------------
 2A +0V-                                                                                                                    ./.
 2B +0V-
 2C +0V-
 3A +0V-
 3B +0V-
 3C +0V-
 4A
 4B
 4C
 5A +5V-
 5B +5V-
 5C +5V-
 6A +5V-
 6B +5V-
 6C +5V-
 7A DTR1
 7B DTRI1
 7C
 8A DTR2
 8B DTRI2
 8C
 9A DTR3
 9B DTRI3
 9C
10A DTR4
10B DTRI4
10C
11A DTR5
11B DTRI5
11C
12A DTR6
12B DTRI6
12C
13A DTR7
13B DTRI7
13C
14A DTR8
14B DTRI8
14C
15A
15B
15C
16A
16B
                                                                                                                    ./.
```

```
GRP  1        1.861.885.00                                                                  1.861.885.00
              <--  <--  <--  CONTINUATION                                                    <--  <--  <--  CONTINUATION
==========================================                                                  ==========================================

ELM 11        1.861.860.00                                                                  1.861.860.00
              <--  <--  <--  CONTINUATION                                                    <--  <--  <--  CONTINUATION
------------------------------------------                                                  ------------------------------------------
PNT SIGNAL NAME  COLOR LV TYPE          F                                                   PNT SIGNAL NAME  COLOR LV TYPE          F
------------------------------------------                                                  ------------------------------------------
16C
17A ADT0
17B
17C ADT1
18A ADT2
18B
18C
19A
19B RPTREND
19C LCTREND
20A DINT
20B ISYNC
20C IWRET
21A
21B
21C
22A
22B
22C SYSCFS1
23A SYSCFS2
23B MVARI
23C TAPETYPE
24A CLK1
24B
24C
25A CLK6
25B
25C
26A
26B
26C
27A +5V-
27B +5V-
27C +5V-
28A +5V-
28B +5V-
28C +5V-
29A
29B
29C
30A +0V-
30B +0V-
30C +0V-
31A +0V-
31B +0V-
31C +0V-
32A +0V-
                                                                                                                    ./.
```

```
*****************************************************************************************************************
*   WILLI STUDER AG   *   L O C A T I O N   P I N   L I S T                  *  86/12/08  *  10:54  *   P A G E  43   *
*****************************************************************************************************************
*           1.861.022.00  D820X PCM RECORDER                                   *  86/08/27 - 00                    *
*****************************************************************************************************************
ASY  4        1.861.320.00  ELECTRONICS BOX                                                  <--  <--  <--  CONTINUATION

GRP  1        1.861.885.00                                                                  1.861.885.00
              <--  <--  <--  CONTINUATION                                                    <--  <--  <--  CONTINUATION
==========================================                                                  ==========================================

ELM 12        1.861.861.00                                                                  1.861.861.00
    RT/TC CODEC                                                                             <--  <--  <--  CONTINUATION
------------------------------------------                                                  ------------------------------------------
PNT SIGNAL NAME  COLOR LV TYPE          F                                                   PNT SIGNAL NAME  COLOR LV TYPE          F
------------------------------------------                                                  ------------------------------------------
 1A +0V-                                                                                    32B +0V-
 1B +0V-                                                                                    32C +0V-
 1C +0V-                                                                                    ------------------------------------------
 2A +0V-                                                                                                                    ./.
 2B +0V-
 2C +0V-
 3A +0V-
 3B +0V-
 3C +0V-
 4A
 4B
 4C
 5A +5V-
 5B +5V-
 5C +5V-
 6A +5V-
 6B +5V-
 6C +5V-
 7A TTIXLOOP
 7B
 7C
 8A PBTR2
 8B PBITR2
 8C RTSYNC
 9A WRTR2
 9B WRITR2
 9C ISYRT
10A PBTR1
10B PBITR1
10C DSSY
11A WRTR1
11B WRITR1
11C RESHPG1
12A RESHPG2
12B CLK5
12C TEST1
13A
13B
13C
14A -20
14B -20
14C -20
15A ANA-GND
15B ANA-GND
15C ANA-GND
16A TCIN
16B TCIIN
                                                                                                                    ./.
```

```
GRP  1        1.861.885.00                                                                  1.861.885.00
              <--  <--  <--  CONTINUATION                                                    <--  <--  <--  CONTINUATION
==========================================                                                  ==========================================

ELM 12        1.861.861.00                                                                  1.861.861.00
              <--  <--  <--  CONTINUATION                                                    <--  <--  <--  CONTINUATION
------------------------------------------                                                  ------------------------------------------
PNT SIGNAL NAME  COLOR LV TYPE          F                                                   PNT SIGNAL NAME  COLOR LV TYPE          F
------------------------------------------                                                  ------------------------------------------
16C
17A TCOUT
17B TCIOUT
17C
18A CBUSCLK
18B CBUSICLK
18C CBUSAD
19A CBUSIAD
19B CBUSDAT
19C CBUSIDAT
20A +20
20B +20
20C +20
21A
21B
21C
22A RTOUT
22B RTIOUT
22C SYSCFS1
23A SYSCFS2
23B MVARI
23C TAPETYPE
24A
24B
24C SLR
25A
25B
25C
26A
26B
26C ICLK6
27A +5V-
27B +5V-
27C +5V-
28A +5V-
28B +5V-
28C +5V-
29A
29B
29C
30A +0V-
30B +0V-
30C +0V-
31A +0V-
31B +0V-
31C +0V-
32A +0V-
                                                                                                                    ./.
```

```
*    WILLI STUDER AG    *    L O C A T I O N     P I N     L I S T          * 86/12/08 * 10:54 *  P A G E  44   *
*                1.861.022.00  D820X PCM RECORDER                          * 86/08/27 - 00                       *
ASY  4          1.861.320.00  ELECTRONICS BOX                                          <--  <--  <--  CONTINUATION

GRP  1          1.861.885.00
                <--  <--  <--  CONTINUATION

ELM 13          1.861.862.00
    TIMING + TEST

PNT SIGNAL NAME  COLOR LV TYPE          F
 1A +0V-
 1B +0V-
 1C +0V-
 2A +0V-
 2B +0V-
 2C +0V-
 3A +0V-
 3B +0V-
 3C +0V-
 4A SAMPCLK
 4B SAMPICLK
 4C DDCHPRO
 5A +5V-
 5B +5V-
 5C +5V-
 6A +5V-
 6B +5V-
 6C +5V-
 7A VCLKIN
 7B GNDCKI
 7C WDCKI
 8A SY/WDCKO
 8B GNDCKO
 8C
 9A VIDCLK
 9B VIDICLK
 9C RTSYNC
 CA WDIN
 CB WDIIN
 CC
 DA -20
 DB -20
 DC -20
 EA
 EB TTWREMPH
 EC TTRDEMPH
 FA TTIXLCOP
 FB TTREC
 FC TRII
 GA SYWDOUT
 GB SYWDIOUT
 GC
 HA AESIN
 HB AESIIN
 HC
 JA TREFEXT
 JB TIREFEXT
                                                                          ./.

GRP  1          1.861.885.00
                <--  <--  <--  CONTINUATION

ELM 13          1.861.862.00
                <--  <--  <--  CONTINUATION

PNT SIGNAL NAME  COLOR LV TYPE          F
 1C
 17A I2ECCLK
 17B I2ECCLK
 17C
 18A CBUSCLK
 18B CBUSICLK
 18C CBUSAD
 19A CBUSIAD
 19B CBUSDAT
 19C CBUSIDAT
 20A HI/LC
 20B SECSYN
 20C
 21A +20
 21B +20
 21C +20
 22A PDCLK3
 22B PDICLK3
 22C
 23A ITE2
 23B
 23C
 24A CLK1
 24B CLK4
 24C CLK5
 25A CLK6
 25B CLK7
 25C CLK8
 26A CLK9
 26B ICLK5
 26C ICLK6
 27A +5V-
 27B +5V-
 27C +5V-
 28A +5V-
 28B +5V-
 28C +5V-
 29A
 29B
 29C
 30A +0V-
 30B +0V-
 30C +0V-
 31A +0V-
 31B +0V-
 31C +0V-
 32A +0V-
                                                                          ./.

GRP  1          1.861.885.00
                <--  <--  <--  CONTINUATION

ELM 13          1.861.862.00
                <--  <--  <--  CONTINUATION

PNT SIGNAL NAME  COLOR LV TYPE          F
32B +0V-
32C +0V-
                                                                          ./.
```

```
*    WILLI STUDER AG    *    L O C A T I O N     P I N     L I S T          * 86/12/08 * 10:54 *  P A G E  45   *
*                1.861.022.00  D820X PCM RECORDER                          * 86/08/27 - 00                       *
ASY  4          1.861.320.00  ELECTRONICS BOX                                          <--  <--  <--  CONTINUATION

GRP  1          1.861.885.00
                <--  <--  <--  CONTINUATION

ELM 14          1.861.763.00
    SYSTEM CONTROLLER 1

PNT SIGNAL NAME  COLOR LV TYPE          F
 1A +0V-
 1B +0V-
 1C +0V-
 2A +0V-
 2B +0V-
 2C +0V-
 3A +0V-
 3B +0V-
 3C +0V-
 4A TSTSIFTD
 4B TSTSIFRD
 4C
 5A +5V-
 5B +5V-
 5C +5V-
 6A +5V-
 6B +5V-
 6C +5V-
 7A SSDACLK
 7B SSDAICLK
 7C
 8A SSDAMTX
 8B SSDAIMTX
 8C
 9A SSDACTS
 9B SSDAICTS
 9C
 CA SSDADTR
 CB SSDAIDTR
 CC
 DA SSDAMRX
 DB SSDAIMRX
 DC
 EA P-DATA0
 EB P-DATA1
 EC P-DATA2
 FA P-DATA3
 FB P-DATA4
 FC P-DATA5
 GA P-DATA6
 GB P-DATA7
 GC
 HA P-EN
 HB P-RW
 HC P-IRES
 JA P-INMI
 JB PWRUK
                                                                          ./.

GRP  1          1.861.885.00
                <--  <--  <--  CONTINUATION

ELM 14          1.861.763.00
                <--  <--  <--  CONTINUATION

PNT SIGNAL NAME  COLOR LV TYPE          F
 16C P-IN2
 17A P-OUT1
 17B P-OUT2
 17C
 18A CBUSCLK
 18B CBUSICLK
 18C CBUSAD
 19A CBUSIAD
 19B CBUSDAT
 19C CBUSIDAT
 20A P-ADDR00
 20B P-ADDR01
 20C P-ADDR02
 21A P-ADDR03
 21B P-ADDR04
 21C P-ADDR05
 22A P-ADDR06
 22B P-ADDR07
 22C P-ADDR08
 23A P-ADDR09
 23B P-ADDR10
 23C P-ADDR11
 24A P-ISEL0
 24B P-ISEL1
 24C P-ISEL2
 25A P-ISEL3
 25B K-PWRUP
 25C
 26A +20
 26B +20PC
 26C
 27A +5V-
 27B +5V-
 27C +5V-
 28A +5V-
 28B +5V-
 28C +5V-
 29A -20
 29B
 29C
 30A +0V-
 30B +0V-
 30C +0V-
 31A +0V-
 31B +0V-
 31C +0V-
 32A +0V-
                                                                          ./.

GRP  1          1.861.885.00
                <--  <--  <--  CONTINUATION

ELM 14          1.861.763.00
                <--  <--  <--  CONTINUATION

PNT SIGNAL NAME  COLOR LV TYPE          F
32B +0V-
32C +0V-
                                                                          ./.
```

PUBLISHED: 12/86

```
*   WILLI STUDER AG   *   L O C A T I O N   P I N   L I S T   * 86/12/08 * 10:54 * P A G E 46 *
*                                                             * 86/08/27 - 00                  *
*         1.861.022.00  D820X PCM RECORDER
ASY  4        1.861.320.00  ELECTRONICS BOX                                  <--  <--  <--  CONTINUATION

GRP  1        1.861.885.00
              <--  <--  <--  CONTINUATION

ELM 15        1.861.763.00
    SYSTEM CONTROLLER 2

PNT SIGNAL NAME  COLOR LV TYPE          F
 1A +0V-
 1B +0V-
 1C +0V-
 2A +0V-
 2B +0V-
 2C +0V-
 3A +0V-
 3B +0V-
 3C +0V-
 4A TSTSIFTD
 4B TSTSIFRD
 4C
 5A +5V-
 5B +5V-
 5C +5V-
 6A +5V-
 6B +5V-
 6C +5V-
 7A SSDAICLK
 7B SSDAICLK
 7C
 8A SSDAMTX
 8B SSDAIMTX
 8C
 9A SSDACTS
 9B SSDAICTS
 9C
10A SSDADTR
10B SSDAIDTR
10C
11A SSDAMRX
11B SSDAIMRX
11C
12A P-DATA02
12B P-DATA12
12C P-DATA22
13A P-DATA32
13B P-DATA42
13C P-DATA52
14A P-DATA62
14B P-DATA72
14C
15A P-EN2
15B P-RW2
15C P-IRES2
16A P-INMI2
16B PWRUK
                                        ./.

GRP  1        1.861.885.00
              <--  <--  <--  CONTINUATION

ELM 15        1.861.763.00
              <--  <--  <--  CONTINUATION

PNT SIGNAL NAME  COLOR LV TYPE          F
16C P-IN2
17A P-OUT12
17B P-OUT22
17C
18A CBUSCLK
18B CBUSICLK
18C CBUSAD
19A CBUSIAD
19B CBUSDAT
19C CBUSIDAT
20A P-ADDR20
20B P-ADDR21
20C P-ADDR22
21A P-ADDR23
21B P-ADDR24
21C P-ADDR25
22A P-ADDR26
22B P-ADDR27
22C P-ADDR28
23A P-ADDR29
23B P-ADDR30
23C P-ADDR31
24A P-ISEL02
24B P-ISEL12
24C P-ISEL22
25A P-ISEL32
25B K-PWRUP
25C
26A +20
26B +20PC
26C
27A +5V-
27B +5V-
27C +5V-
28A +5V-
28B +5V-
28C +5V-
29A -20
29B
29C
30A +0V-
30B +0V-
30C +0V-
31A +0V-
31B +0V-
31C +0V-
32A +0V-
                                        ./.

GRP  1        1.861.885.00
              <--  <--  <--  CONTINUATION

ELM 15        1.861.763.00
              <--  <--  <--  CONTINUATION

PNT SIGNAL NAME  COLOR LV TYPE          F
32B +0V-
32C +0V-

ELM 16        1.861.775.00
    CONNECTOR 1                  (ANALOG I/O)

PNT SIGNAL NAME  COLOR LV TYPE          F
 1  ANA-GND
 2  GNDOUT-2
 3  ANA-GND
 4  GNDOUT-1
 5  ANA-GND
 6
 7  ANA-GND
 8
 9  ANA-GND
10  GNDIN-2
11  ANA-GND
12  GNDIN-1
13  ANA-GND
14  ANAOUT-2
15  ANAIOUT2
16  ANAOUT-1
17  ANAIOUT1
18
19
20
21
22  ANAIN-2
23  ANAIIN-2
24  ANAIN-1
25  ANAIIN-1
                                        ./.
```

```
*   WILLI STUDER AG   *   L O C A T I O N   P I N   L I S T   * 86/12/08 * 10:54 * P A G E 47 *
*                                                             * 86/08/27 - 00                  *
*         1.861.022.00  D820X PCM RECORDER
ASY  4        1.861.320.00  ELECTRONICS BOX                                  <--  <--  <--  CONTINUATION

GRP  1        1.861.885.00
              <--  <--  <--  CONTINUATION

ELM 17
    CONNECTOR 2          (BACKPANEL RACK 1)

PNT SIGNAL NAME  COLOR LV TYPE          F
 1  DACOUT1
 2  DACOUT2
 3  PDIBCLK
 4  PDIWCLK
 5  PDIDATA
 6  TIREFINT
 7  TIREFEXT
 8  WRITR1
 9  WRITR2
10  PBITR1
11  PBITR2
12  PDICLK3
13  PDCLK3
14  GNDDAC1
15  GNDDAC2
16  PDBCLK
17  PDWCLK
18  PDDATA
19  TREFINT
20  TREFEXT
21  WRTR1
22  WRTR2
23  PBTR1
24  PBTR2
25  K-PWRUP
                                        ./.

GRP  1        1.861.885.00
              <--  <--  <--  CONTINUATION

ELM 18
    CONNECTOR 3          (BACKPANEL RACK 3)

PNT SIGNAL NAME  COLOR LV TYPE          F
 1  BLISYN
 2  WRICLK4
 3  WRIDOUT
 4  WRISYO
 5  DTRI8
 6  DTRI7
 7  DTRI6
 8  DTRI5
 9  DTRI4
10  DTRI3
11  DTRI2
12  DTRI1
13
14  BLSYN
15  WRCLK4
16  WRDOUT
17  WRSYO
18  DTR8
19  DTR7
20  DTR6
21  DTR5
22  DTR4
23  DTR3
24  DTR2
25  DTR1
                                        ./.

GRP  1        1.861.885.00
              <--  <--  <--  CONTINUATION

ELM 19
    CONNECTOR 4                  (TC+AES+BNC)

PNT SIGNAL NAME  COLOR LV TYPE          F
 1  AESGNDO
 2
 3  AESGNDI
 4
 5  GNDTCOUT
 6
 7  GNDTCIN
 8
 9  GNDCKI
10
11  GNDCKO
12  RTOUT
13  RTIOUT
14  AESO1
15  AESIO1
16  AESIN
17  AESIIN
18  TCOUT
19  TCIOUT
20  TCIN
21  TCIIN
22  WDCKI
23  VCLKIN
24  SY/WDCKO
25
                                        ./.
```

PUBLISHED: 12/86

```
*****************************************************************************************************************
*   WILLI STUDER AG   *   L O C A T I O N   P I N   L I S T                 * 86/12/08 * 10:54 *  P A G E  48  *
*****************************************************************************************************************
*            1.861.022.00  D820X PCM RECORDER                                 * 86/08/27 - 00                    *
*****************************************************************************************************************
ASY  4        1.861.320.00  ELECTRONICS BOX                                                  <--  <--  <--  CONTINUATION

GRP  1        1.861.885.00                  GRP  1        1.861.885.00                  GRP  1        1.861.885.00
             <--  <--  <--  CONTINUATION                <--  <--  <--  CONTINUATION                <--  <--  <--  CONTINUATION
==================================================================================================================

ELM 20                                      ELM 21                                      ELM 22
    CONNECTOR 5            (TC+EXT CLK)         CONNECTOR 6            (TERMINAL)           CONNECTOR 7      (BACKPANEL RACK 2)
------------------------------------------------------------------------------------------------------------------
PNT SIGNAL NAME  COLOR LV TYPE          F   PNT SIGNAL NAME  COLOR LV TYPE          F   PNT SIGNAL NAME  COLOR LV TYPE          F
------------------------------------------------------------------------------------------------------------------
 1  SYWDIOUT                                 1                                        1  SSDAICLK
 2  WDIIN                                    2  TSTSIFRD                                2  SSDAIDTR
 3  VIDICLK                                  3  TSTSIFTD                                3  SSDAIMTX
 4  TCIOUT                                   4                                        4  SSDAIMRX
 5  TCIIN                                    5                                        5  SSDAICTS
 6  RTIOUT                                   6                                        6  CBUSICLK
 7                                           7  +0V-                                   7  CBUSIAD
 8                                           8                                        8  CBUSIDAT
 9                                           9                                        9
10                                          10                                       10  +0V-
11                                          11                                       11  +0V-
12                                          12                                       12  +0V-
13                                          13                                       13  +0V-
14  SYWDOUT                                 14                                       14  SSDACLK
15  WDIN                                    15                                       15  SSDADTR
16  VIDCLK                                  16                                       16  SSDAMTX
17  TCOUT                                   17                                       17  SSDAMRX
18  TCIN                                    18                                       18  SSDACTS
19  RTOUT                                   19                                       19  CBUSCLK
20                                          20                                       20  CBUSAD
21                                          21                                       21  CBUSDAT
22                                          22                                       22  +20PC
23                                          23                                       23  +20PC
24                                          24                                       24  +20PC
25                                          25                                       25  +20PC
------------------------------------------------------------------------------------------------------------------
                                    ./.                                     ./.                                     ./.
```

```
*****************************************************************************************************************
*   WILLI STUDER AG   *   L O C A T I O N   P I N   L I S T                 * 86/12/08 * 10:54 *  P A G E  49  *
*****************************************************************************************************************
*            1.861.022.00  D820X PCM RECORDER                                 * 86/08/27 - 00                    *
*****************************************************************************************************************
ASY  4        1.861.320.00  ELECTRONICS BOX                                                  <--  <--  <--  CONTINUATION

GRP  1        1.861.885.00                  GRP  1        1.861.885.00                  GRP  1        1.861.885.00
             <--  <--  <--  CONTINUATION                <--  <--  <--  CONTINUATION                <--  <--  <--  CONTINUATION
==================================================================================================================

ELM 23        1.861.515.00                  ELM 23        1.861.515.00                  ELM 51
    POWER SUPPLY                                         <--  <--  <--  CONTINUATION         BOX-RACK 2 CONNECTOR          (CABLE)
------------------------------------------------------------------------------------------------------------------
PNT SIGNAL NAME  COLOR LV TYPE          F   PNT SIGNAL NAME  COLOR LV TYPE          F   PNT SIGNAL NAME  COLOR LV TYPE          F
------------------------------------------------------------------------------------------------------------------
 2A +0V-                                    32C +0V-                                     1  SSDAICLK
 2B +0V-                                    ------------------------------------------   2  SSDAIDTR
 2C +0V-                                    ELM 50                                       3  SSDAIMTX
 4A +0V-                                        BOX-RACK 1 CONNECTOR          (CABLE)    4  SSDAIMRX
 4B +0V-                                    ------------------------------------------   5  SSDAICTS
 4C +0V-                                    PNT SIGNAL NAME  COLOR LV TYPE          F   6  CBUSICLK
 6A +5V-                                    ------------------------------------------   7  CBUSIAD
 6B +5V-                                     1  DACOUT1                                   8  CBUSIDAT
 6C +5V-                                     2  DACOUT2                                   9
 8A +5V-                                     3  PDIBCLK                                  10  +0V-
 8B +5V-                                     4  PDIWCLK                                  11  +0V-
 8C +5V-                                     5  PDIDATA                                  12  +0V-
10A K-PWRUP                                  6  TIREFINT                                 13  +0V-
10B SAMPCLK                                  7  TIREFEXT                                 14  SSDACLK
10C SAMPICLK                                 8  WRITR1                                   15  SSDADTR
12A PWROK                                    9  WRITR2                                   16  SSDAMTX
12B                                         10  PBITR1                                   17  SSDAMRX
12C FANOUT                                  11  PBITR2                                   18  SSDACTS
14A +20PC                                   12  PDICLK3                                  19  CBUSCLK
14B +20PC                                   13  PDCLK3                                   20  CBUSAD
14C +20PC                                   14  GNDDAC1                                  21  CBUSDAT
16A +0V-                                    15  GNDDAC2                                  22  +20PC
16B +0V-                                    16  PCBCLK                                   23  +20PC
16C +0V-                                    17  PDWCLK                                   24  +20PC
18A -20                                     18  PDDATA                                   25  +20PC
18B -20                                     19  TREFINT                                  ------------------------------------
18C -20                                     20  TREFEXT                                                                ./.
20A ANA-GND                                 21  WRTR1
20B ANA-GND                                 22  WRTR2
20C ANA-GND                                 23  PBTR1
22A +20                                     24  PBTR2
22B +20                                     25  K-PWRUP
22C +20                                     ------------------------------------------
24A ANA-GND                                                                                 ./.
24B ANA-GND
24C ANA-GND
26A +5V-
26B +5V-
26C +5V-
28A +5V-
28B +5V-
28C +5V-
30A +0V-
30B +0V-
30C +0V-
32A +0V-
32B +0V-
                                    ./.
```

PUBLISHED: 12/86

```
*    WILLI STUDER AG    *    L O C A T I O N    P I N    L I S T              * 86/12/08 * 10:54 *  P A G E  50   *
*                                                                              * 86/08/27 - 00                     *
ASY  4        1.861.320.00  ELECTRONICS BOX                                                  <--  <--  <--  CONTINUATION

GRP  1        1.861.885.00                                  GRP  2        1.861.775.00                  GRP  7        1.861.775.00
              <--  <--  <--  CONTINUATION                        ANALOG I/O                                <--  <--  <--  CONTINUATION

ELM 52                                                      ELM  1        1.861.775.00                ELM 22
    BOX-RACK 3 CONNECTOR              (CABLE)                   CHANNEL 2 OUTPUT                (XLR)     CHANNEL 7 I/O (CABLE)          (CIS)
PNT SIGNAL NAME  COLOR LV TYPE          F                   PNT SIGNAL NAME  COLOR LV TYPE          F   PNT SIGNAL NAME  COLOR LV TYPE          F
  1  BLISYN                                                   1  GNDOUT-2                                 1
  2  WRICLK4                                                  2  ANAOUT-2                                 2  GNDIN-7
  3  WRIDOUT                                                  3  ANAIOUT2                                 3  ANAIN-7
  4  WRISYO                                                                                                   4  ANAITN-7
  5  DTRI8                                                ELM  2        1.861.775.00                        5  GNDOUT-7
  6  DTRI7                                                    CHANNEL 2 INPUT                 (XLR)       6  ANAOUT-7
  7  DTRI6                                                PNT SIGNAL NAME  COLOR LV TYPE          F       7  ANAIOUT2
  8  DTRI5                                                    1  GNDIN-2
  9  DTRI4                                                    2  ANAIN-2
 10  DTRI3                                                    3  ANAIIN-2
 11  DTRI2
 12  DTRI1                                                ELM  3        1.861.775.00
 13                                                           CHANNEL 1 OUTPUT                (XLR)
 14  BLSYN                                                PNT SIGNAL NAME  COLOR LV TYPE          F
 15  WRCLK4                                                   1  GNDOUT-1
 16  WRDOUT                                                   2  ANAOUT-1
 17  WRSYO                                                    3  ANAIOUT1
 18  DTR8
 19  DTR7                                                 ELM  4        1.861.775.00
 20  DTR6                                                     CHANNEL 1 INPUT                 (XLR)
 21  DTR5                                                 PNT SIGNAL NAME  COLOR LV TYPE          F
 22  DTR4                                                     1  GNDIN-1
 23  DTR3                                                     2  ANAIN-1
 24  DTR2                                                     3  ANAIIN-1
 25  DTR1
                                                          ELM 21
                                                              CHANNEL 1 I/O (CABLE)           (CIS)
                                                          PNT SIGNAL NAME  COLOR LV TYPE          F
                                                            1
                                                            2  GNDIN-1
                                                            3  ANAIN-1
                                                            4  ANAIIN-1
                                                            5  GNDOUT-1
                                                            6  ANAOUT-1
                                                            7  ANAIOUT1
                                                                                                        ./.
```

```
*    WILLI STUDER AG    *    L O C A T I O N    P I N    L I S T              * 86/12/08 * 10:54 *  P A G E  51   *
*                                                                              * 86/08/27 - 00                     *
ASY  4        1.861.320.00  ELECTRONICS BOX                                                  <--  <--  <--  CONTINUATION

GRP  3                                                      GRP  3                                      GRP  3
    DI/DO/TC/RT/CLOCK/TEST/BNC                                        <--  <--  <--  CONTINUATION                <--  <--  <--  CONTINUATION

ELM  5                                                      ELM 10                                      ELM 12
    DIGITAL OUTPUT (DO)               (XLR)                     TIME CODE I/O BOARD             (CIS)         TEST (TERMINAL)                (RS232)
PNT SIGNAL NAME  COLOR LV TYPE          F                   PNT SIGNAL NAME  COLOR LV TYPE          F   PNT SIGNAL NAME  COLOR LV TYPE          F
  1  AESGNDO                                                  1                                           1
  2  AESO1                                                    2  GNDTCIN                                  2  TSTSIERO
  3  AESIO1                                                   3  TCIN                                     3  TSTSIETO
                                                              4  TCIIN                                    4
ELM  6                                                        5  GNDTCOUT                                 5
    DIGITAL INPUT (DI)                (XLR)                   6  TCOUT                                    6
PNT SIGNAL NAME  COLOR LV TYPE          F                     7  TCIOUT                                   7  +OV-
  1  AESGNDI                                                                                              8
  2  AESIN                                                ELM 11                                          9
  3  AESIIN                                                   TC + EXTERNAL CLK CONNECTOR                 10
                                                          PNT SIGNAL NAME  COLOR LV TYPE          F       11
ELM  7                                                        1  SYWDICUT                                 12
    TC OUTPUT                         (XLR)                   2  WCIIN                                    13
PNT SIGNAL NAME  COLOR LV TYPE          F                     3  VIDICLK                                  14
  1  GNDTCOUT                                                 4  TCIOLT                                   15
  2  TCOUT                                                    5  TCIIN                                    16
  3  TCIOUT                                                   6                                           17
                                                              7                                           18
ELM  8                                                        8                                           19
    TC INPUT                          (XLR)                   9                                           20
PNT SIGNAL NAME  COLOR LV TYPE          F                    10                                           21
  1  GNDTCIN                                                 11                                           22
  2  TCIN                                                    12                                           23
  3  TCIIN                                                   13                                           24
                                                             14  SYWCCUT                                  25
ELM  9                                                       15  WDIN
    RT OUTPUT                         (XLR)                  16  VIDCLK                                ELM 13
PNT SIGNAL NAME  COLOR LV TYPE          F                    17  TCOUT                                     CLOCK OUTPUT                   (BNC)
  1  GROUND                                                  18  TCIN                                  PNT SIGNAL NAME  COLOR LV TYPE          F
  2  RTOUT                                                   19                                           1  SY/WDCKO
  3  RTIOUT                                                  20                                           2  GNDCKO
                                                             21
                                                             22                                        ELM 14
                                                             23                                            CLOCK INPUT                    (BNC)
                                                             24                                        PNT SIGNAL NAME  COLOR LV TYPE          F
                                                             25                                          1  WCCKI
                                                                                                         2  GNDCKI
                                                                                                                                                ./.
                                                                                                                ./.
```

PUBLISHED: 12/86

```
*   WILLI STUDER AG   *   L O C A T I O N   P I N   L I S T          * 86/12/08 * 10:54 * P A G E 52 *
*           1.861.022.00  D820X PCM RECORDER                                 * 86/08/27 - 00                *
ASY 4       1.861.320.00  ELECTRONICS ECX                                                  <-- <-- <-- CONTINUATION

GRP 3
            <-- <-- <-- CONTINUATION
==========================================

ELM 15
    VIDEO CLOCK INPUT                (BNC)
------------------------------------------
PNT SIGNAL NAME  COLOR LV TYPE          F
------------------------------------------
 1  VCLKIN
 2  GNDCKI
------------------------------------------

ELM 23        1.861.775.00
    DIGITAL I/O                      (CIS)
------------------------------------------
PNT SIGNAL NAME  COLOR LV TYPE          F
------------------------------------------
 1
 2  AESGNDI
 3  AESIN
 4  AESIIN
 5  AESGNDO
 6  AESO1
 7  AESIO1
------------------------------------------

ELM 24        1.861.771.00
    TC TRANSFORMATOR                 (CIS)
------------------------------------------
PNT SIGNAL NAME  COLOR LV TYPE          F
------------------------------------------
 1
 2  GNDTCIN
 3  TCIN
 4  TCIIN
 5  GNDTCOUT
 6  TCOUT
 7  TCIOUT
------------------------------------------

ELM 25
    REFERENCE TIME I/O               (CIS)
------------------------------------------
PNT SIGNAL NAME  COLOR LV TYPE          F
------------------------------------------
 1  GROUND
 2
 3
 4
 5  GROUND
 6  RTOUT
 7  RTIOUT
------------------------------------------
                                      ./.
```

```
GRP 3
            <-- <-- <-- CONTINUATION
==========================================

ELM 26        1.861.776.00
    BNC INTERCONNECTION              (CIS)
------------------------------------------
PNT SIGNAL NAME  COLOR LV TYPE          F
------------------------------------------
 1  VCLKIN
 2
 3  GNDCKI
 4  WDCKI
 5  GNDCKO
 6  SY/WDCKO
------------------------------------------
```

```
*   WILLI STUDER AG   *   L O C A T I O N   P I N   L I S T          * 86/12/08 * 10:54 * P A G E 53 *
*           1.861.022.00  D820X PCM RECORDER                                 * 86/08/27 - 00                *
ASY 5       1.050.111.00  HEADBLOCK TYPE S

GRP 1       1.116.861.20
    READ HEAD
==========================================

ELM 2       1.116.861.20
    READ HEAD INTERCONNECTION   (FLEXI)
------------------------------------------
PNT SIGNAL NAME  COLOR LV TYPE          F
------------------------------------------
 1  RDHD211
 2  RDHD212
 3  RDHD209
 4  RDHD210
 5  RDHD207
 6  RDHD208
 7  RDHD205
 8  RDHD206
 9  RDHD203
10  RDHD204
11  RDHD201
12  RDHD202
13  RDHD111
14  RDHD112
15  RDHD109
16  RDHD110
17  RDHD107
18  RDHD108
19  RDHD105
20  RDHD106
21  RDHD103
22  RDHD104
23  RDHD101
24  RDHD102
------------------------------------------
```

```
GRP 2       1.116.861.10
    WRITE HEAD
==========================================

ELM 1       1.116.861.10
    HEADBLOCK CONNECTOR WRITE        (P4)
------------------------------------------
PNT SIGNAL NAME  COLOR LV TYPE          F
------------------------------------------
 1  WRTOUT1
 2  IWROUT1
 3  WRTOUT2
 4  IWROUT2
 5  WRTOUT3
 6  IWROUT3
 7  WRTOUT4
 8  IWROUT4
 9  WRTOUT5
10  IWROUT5
11  WRTOUT6
12  IWROUT6
13  WRTOUT7
14  IWROUT7
15  WRTOUT8
16  IWROUT8
17  WRTOUT9
18  IWROUT9
19  WRTOUT10
20  IWROUT10
21
22
23  WRTOUT11
24  IWROUT11
25  WRTOUT12
26  IWROUT12
------------------------------------------
```

```
GRP 3       1.861.805.00
    HEAD PREAMPLIFIER
==========================================

ELM 1       1.861.805.00
    HEAD-AMPLIFIER CONNECTOR (D-SUB 25)
------------------------------------------
PNT SIGNAL NAME  COLOR LV TYPE          F
------------------------------------------
 1  HDTR5
 2  HDTR9
 3  HDTR7
 4  HDTR3
 5  HDTR4
 6  HDTR8
 7  HDTR10
 8  HDTR6
 9  HDTR1
10  HDTR11
11  HDTR12
12  HDTR2
13  +10
14  +10
15  +10
16  +10
17  +10
18  +0.0
19  +0.0
20  +0.0
21  +0.0
22  -10
23  -10
24  -10
25  -10
------------------------------------------

ELM 2       1.861.805.00
    CONNECTOR EVEN TRACKS (AMP12)
------------------------------------------
PNT SIGNAL NAME  COLOR LV TYPE          F
------------------------------------------
 1  RDHD201
 2  RDHD202
 3  RDHD203
 4  RDHD204
 5  RDHD205
 6  RDHD206
 7  RDHD207
 8  RDHD208
 9  RDHD209
10  RDHD210
11  RDHD211
12  RDHD212
------------------------------------------
                                      ./.
```

WILLI STUDER AG * L O C A T I O N P I N L I S T * 86/12/08 * 10:54 * P A G E 54 *
1.861.022.00 D820X PCM RECORDER * 86/08/27 - 00
ASY 5 1.051.111.00 HEADBLOCK TYPE S <-- <-- <-- CONTINUATION

GRP 3 1.861.805.00
<-- <-- <-- CONTINUATION

ELM 3 1.861.805.00
CONNECTOR ODD TRACKS (AMP12)

PNT	SIGNAL NAME	COLOR	LV	TYPE	F
1	RDHD101				
2	RDHD102				
3	RDHD103				
4	RDHD104				
5	RDHD105				
6	RDHD106				
7	RDHD107				
8	RDHD108				
9	RDHD109				
10	RDHD110				
11	RDHD111				
12	RDHD112				

WILLI STUDER AG * L O C A T I O N P I N L I S T * 86/12/08 * 10:54 * P A G E 55 *
1.861.022.00 D820X PCM RECORDER * 86/08/27 - 00
ASY 11 1.861.080.00 TAPE TRANSPORT D820X

GRP 1 54.04.0111
POWER INPUT

ELM 1
POWER CONNECTOR PO1

PNT	SIGNAL NAME	COLOR	LV	TYPE	F
1	LINE1	1		J	
2	LINE2	6		J	
3	GND	5-4		J	

GRP 2
EARTH CONNECTORS

ELM 1
EARTH CONTACT

PNT	SIGNAL NAME	COLOR	LV	TYPE	F
1	GND	5-4		J	

ELM 2
EARTH CONTACT

PNT	SIGNAL NAME	COLOR	LV	TYPE	F
1	GND	4		J	

ELM 3 1.010.001.53
EARTH CONTACT

PNT	SIGNAL NAME	COLOR	LV	TYPE	F
1	GND				

GRP 3 55.12.0001
POWER SWITCH

ELM 1
POWER SWITCH

PNT	SIGNAL NAME	COLOR	LV	TYPE	F
1	LINE1	1		J	
2	LINE2	6		J	
3	S-LINE1	1		J	
4	S-LINE2	6		J	

WILLI STUDER AG * L O C A T I O N P I N L I S T * 86/12/08 * 10:54 * P A G E 56 *
1.861.022.00 D820X PCM RECORDER * 86/08/27 - 00
ASY 11 1.861.080.00 TAPE TRANSPORT D820X <-- <-- <-- CONTINUATION

GRP 4 1.180.337.00
LINE FILTER

ELM 1
LINE FILTER

PNT	SIGNAL NAME	COLOR	LV	TYPE	F
1	S-LINE1	1		Y	
2	S-LINE1	0		L	
3					
4	LINE1	1		Y	
5	LINE1	1		Y	
6					
7					
8	SF-LINE1	1		Y	
9	SF-LINE1	8		L	
10	SF-LINE1	1		Y	
11	GND	4		Y	
12	S-LINE2	0		L	
13					
14	LINE2	6		Y	
15	LINE2	6		Y	
16	S-LINE2	6		Y	
17					
18					
19	SF-LINE2	8		L	
20	SF-LINE2	4		Y	
21	SF-LINE2	8		Y	

GRP 5
FUSES (LINE)

ELM 1 53.03.0106
FUSE HOLDER, F01

PNT	SIGNAL NAME	COLOR	LV	TYPE	F
1	SF-LINE1	1		L	
2	PRIMV-2	1		L	

ELM 2 53.03.0106
FUSE HOLDER, F02

PNT	SIGNAL NAME	COLOR	LV	TYPE	F
1	SF-LINE1	1		L	
2	PRIMW-2	1		L	

GRP 6
DISTRIBUTOR

ELM 1
DISTRIBUTOR

PNT	SIGNAL NAME	COLOR	LV	TYPE	F
1A	PRIMV-2	1		K	
1B					
1C	PRIMV-2	1		K	
1D	PRIMV-2	1		K	
2A	PRIMV-3	2		K	
2B					
2C	PRIMV-3	2		K	
2D	PRIMV-3	2		K	
3A	PRIMV-5	3		K	
3B					
3C	PRIMV-5	3		K	
3D	PRIMV-5	3		K	
4A	SF-LINE2	4		K	
4B					
4C	SF-LINE2	4		K	
4D	SF-LINE2	4		K	
5A	PRIMW-2	5		K	
5B					
5C	PRIMW-2	5		K	
5D	PRIMW-2	5		K	
6A	PRIMW-3	6		K	
6B					
6C	PRIMW-3	6		K	
6D	PRIMW-3	6		K	
7A	PRIMW-5	7		K	
7B					
7C	PRIMW-5	7		K	
7D	PRIMW-5	7		K	
8A	SF-LINE2	8		K	
8B					
8C	SF-LINE2	8		K	
8D	SF-LINE2	8		K	

PUBLISHED: 12/86

WILLI STUDER AG * L O C A T I O N P I N L I S T * 86/12/08 * 10:54 * P A G E 57 *
1.861.022.00 D820X PCM RECORDER * 86/08/27 - 00
ASY 11 1.861.080.00 TAPE TRANSPORT D820X <-- <-- <-- CONTINUATION

GRP 7
VOLTAGE SELECTOR

ELM 1 55.12.0001
VOLTAGE SELECTOR SO1

PNT	SIGNAL NAME	COLOR	LV	TYPE	F
1	PRIMV-2	1		J	
2	PRIMV-3	2		J	
3	PRIMV-5	3		J	
4	SF-LINE2	4		J	

ELM 2 55.12.0001
VOLTAGE SELECTOR SO2

PNT	SIGNAL NAME	COLOR	LV	TYPE	F
1	PRIMW-3	2		J	
2	PRIMW-3	6		J	
3	PRIMV-5	3		J	
4	PRIMW-5	7		J	

ELM 3 55.12.0001
VOLTAGE SELECTOR SO3

PNT	SIGNAL NAME	COLOR	LV	TYPE	F
1	PRIMW-2	5		J	
2	PRIMW-3	6		J	
3	PRIMW-5	7		J	
4	SF-LINE2	8		J	

GRP 8 1.820.520.00
MAIN TRANSFORMER (SPOOLING MOTORS)

ELM 1 1.820.521.00
PRIMARY 1

PNT	SIGNAL NAME	COLOR	LV	TYPE	F
1	PRIMW-1	0		Y	
2	PRIMW-2	5		Y	
3	PRIMW-3	6		Y	
4	PRIMW-1	0		Y	

ELM 2 1.820.522.00
PRIMARY 2

PNT	SIGNAL NAME	COLOR	LV	TYPE	F
5	PRIMV-5	7		Y	
6	PRIMW-6	0		Y	
7	PRIMW-6	0		Y	
8	SF-LINE2	8		Y	

ELM 3 1.820.523.00
SECONDARY 1

PNT	SIGNAL NAME	COLOR	LV	TYPE	F
9	ACPWM-A6	6		Y	
10	ACPWM-A5	5		Y	
11	ACPWM-A4	4		Y	
12	ACPWM-A3	3		Y	
13	ACPWM-A2	2		Y	
14	ACPWM-A1	1		Y	
15	ACPWM-C1	0		Y	
16	ACPWM-C2	0		Y	
17	ACPWM-C3	0		Y	
18	ACPWM-C4	0		Y	
19	ACPWM-C5	0		Y	
20	ACPWM-C6	0		Y	

./.

GRP 8 1.820.520.00
<-- <-- <-- CONTINUATION

ELM 4 1.820.524.00
SECONDARY 2

PNT	SIGNAL NAME	COLOR	LV	TYPE	F
9	ACPWM-C6	0		Y	
10	ACPWM-C5	0		Y	
11	ACPWM-C4	0		Y	
12	ACPWM-C3	0		Y	
13	ACPWM-C2	0		Y	
14	ACPWM-C1	0		Y	
15	ACPWM-B1	9		Y	
16	ACPWM-B2	9		Y	
17	ACPWM-B3	9		Y	
18	ACPWM-B4	9		Y	
19	ACPWM-B5	9		Y	
20	ACPWM-B6	9		Y	

ELM 5
CONNECTOR TO SPOOLING MOTOR SUPPLY

PNT	SIGNAL NAME	COLOR	LV	TYPE	F
1	ACPWM-A1	1		M	
2	ACPWM-A2	2		M	
3	ACPWM-A3	3		M	
4	ACPWM-A4	4		M	
5	ACPWM-A5	5		M	
6	ACPWM-A6	6		M	
7	ACPWM-B1	9		F	
8	ACPWM-B2	9		F	
9	ACPWM-B3	9		F	
10	ACPWM-B4	9		F	
11	ACPWM-B5	9		F	
12	ACPWM-B6	9		F	

WILLI STUDER AG * L O C A T I O N P I N L I S T * 86/12/08 * 10:54 * P A G E 58 *
1.861.022.00 D820X PCM RECORDER * 86/08/27 - 00
ASY 11 1.861.080.00 TAPE TRANSPORT D820X <-- <-- <-- CONTINUATION

GRP 9 1.820.520.00
MAIN TRANSFORMER

ELM 1 1.820.521.00
PRIMARY 1

PNT	SIGNAL NAME	COLOR	LV	TYPE	F
1	PRIMV-1	0		Y	
2	PRIMV-2	1		Y	
3	PRIMV-3	2		Y	
4	PRIMV-1	0		Y	

ELM 2 1.820.522.00
PRIMARY 2

PNT	SIGNAL NAME	COLOR	LV	TYPE	F
5	PRIMV-5	3		Y	
6	PRIMV-6	0		Y	
7	PRIMV-6	0		Y	
8	SF-LINE2	4		Y	

ELM 3 1.820.523.00
SECONDARY 1

PNT	SIGNAL NAME	COLOR	LV	TYPE	F
9	ACPWE-A6	7		Y	
10	ACPWE-A5	1		Y	
11	ACPWE-A4	1		Y	
12	ACPWE-A3	6		Y	
13	ACPWE-A2	6		Y	
14	ACPWE-A1	6		Y	
15	ACPWE-C1	0		Y	
16	ACPWE-C2	0		Y	
17	ACPWE-C3	0		Y	
18	ACPWE-C4	0		Y	
19	ACPWE-C5	0		Y	
20	ACPWE-C6	0		Y	

./.

GRP 9 1.820.520.00
<-- <-- <-- CONTINUATION

ELM 4 1.820.524.00
SECONDARY 2

PNT	SIGNAL NAME	COLOR	LV	TYPE	F
9	ACPWE-C6	0		Y	
10	ACPWE-C5	0		Y	
11	ACPWE-C4	0		Y	
12	ACPWE-C3	0		Y	
13	ACPWE-C2	0		Y	
14	ACPWE-C1	0		Y	
15	ACPWE-B1	5		Y	
16	ACPWE-B2	5		Y	
17	ACPWE-B3	5		Y	
18	ACPWE-B4	4		Y	
19	ACPWE-B5	4		Y	
20	ACPWE-B6	0		Y	

GRP 10
FUSES (SECONDARY)

ELM 1 53.03.0106
FUSE F01

PNT	SIGNAL NAME	COLOR	LV	TYPE	F
1	ACPWE-A1	6		L	
2	ACPWE-01	9		L	

ELM 2 53.03.0106
FUSE F02

PNT	SIGNAL NAME	COLOR	LV	TYPE	F
1	ACPWE-A4	1		L	
2	ACPWE-04	5		L	

ELM 3 53.03.0106
FUSE F03

PNT	SIGNAL NAME	COLOR	LV	TYPE	F
1	ACPWE-A6	7		L	
2	ACPWE-06	8		L	

PUBLISHED: 12/86

```
*  WILLI STUDER AG  *  L O C A T I O N   P I N   L I S T  * 86/12/08 * 10:54 * P A G E 59 *
*            1.861.022.00  D820X PCM RECORDER  * 86/08/27 - 00 *
ASY 11        1.861.080.00  TAPE TRANSPORT D820X                    <--  <--  <--  CONTINUATION
```

GRP 11
RECTIFIERS

ELM 1 70.01.0231
RECTIFIER DZC1

PNT	SIGNAL NAME	COLOR	LV	TYPE	F
1	ACPWE-D1	9		L	
2	ACPWE-B1	5		L	
3	+STABIN	2		L	
4	+ 0.0	0		L	

ELM 2 70.01.0231
RECTIFIER DZC2

PNT	SIGNAL NAME	COLOR	LV	TYPE	F
1	ACPWE-D4	5		L	
2	ACPWE-B4	4		L	
3	+ 0.0	0		L	
4	-STABIN	6		L	

ELM 3 70.01.0231
RECTIFIER DZC3

PNT	SIGNAL NAME	COLOR	LV	TYPE	F
1	ACPWE-D6	8		L	
2	ACPWE-B6	0		L	
3	+CAPMOT	2		L	
4	0CAPMOT	4		L	

./.

GRP 11 <-- <-- <-- CONTINUATION

ELM 4 52.01.0101
DISTRIBUTOR

PNT	SIGNAL NAME	COLOR	LV	TYPE	F
1A	ACPWE-A1	6		K	
1B	ACPWE-A1	6		K	
1C	ACPWE-A3	6		K	
1D	ACPWE-A2	6		K	
2A	ACPWE-C1	9		K	
2B	ACPWE-D1	9		K	
2C	ACPWE-D1	9		K	
2D					
3A	ACPWE-B1	5		K	
3B	ACPWE-B2	5		K	
3C	ACPWE-B1	5		K	
3D	ACPWE-B1	5		K	
4A					
4B	ACPWE-B1	5		K	
4C	ACPWE-B1	5		K	
4D	ACPWE-B3	5		K	
5A	ACPWE-A4	1		K	
5B	ACPWE-A4	1		K	
5C					
5D	ACPWE-A5	1		K	
6A	ACPWE-B5	4		K	
6B					
6C	ACPWE-B4	4		K	
6D	ACPWE-B4	4		K	

GRP 12
CAPACITORS

ELM 1 59.26.7103
CAPACITOR C01

PNT	SIGNAL NAME	COLOR	LV	TYPE	F
1	+STABIN	2		L	
2	+ 0.0	0		L	

ELM 2 59.26.7103
CAPACITOR C02

PNT	SIGNAL NAME	COLOR	LV	TYPE	F
1	+STABIN	2		L	
2	+ 0.0	0		L	

ELM 3 59.26.7103
CAPACITOR C03

PNT	SIGNAL NAME	COLOR	LV	TYPE	F
1	+ 0.0	0		L	
2	-STABIN	6		L	

ELM 4 59.26.7103
CAPACITOR C04

PNT	SIGNAL NAME	COLOR	LV	TYPE	F
1	+CAPMOT	2		L	
2	0CAPMOT	4		L	

./.

```
*  WILLI STUDER AG  *  L O C A T I O N   P I N   L I S T  * 86/12/08 * 10:54 * P A G E 60 *
*            1.861.022.00  D820X PCM RECORDER  * 86/08/27 - 00 *
ASY 11        1.861.080.00  TAPE TRANSPORT D820X                    <--  <--  <--  CONTINUATION
```

GRP 12 <-- <-- <-- CONTINUATION

ELM 5
CONNECTOR TO GRP32, ELM01 P01

PNT	SIGNAL NAME	COLOR	LV	TYPE	F
1	+STABIN	2		M	
2	+ 0.0	0		M	
3	+ 0.0	0		M	
4	+STABIN	2		M	
5	+ 0.0	0		M	
6	-STABIN	6		M	
7	+CAPMOT	2		M	
8					
9	0CAPMOT	4		M	
10	ACPWE-D1	9		M	
11					
12	ACPWE-B1	5		M	

GRP 18 1.820.592.00
SUPPLY CABLE, SPOOLING MOTORS

ELM 1
FROM GRP31, ELM01 J01

PNT	SIGNAL NAME	COLOR	LV	TYPE	F
1	+PSVTMOT	2		F	
2	+PSVTMOT	2		F	
3	+PSVTMOT	2		F	
4	+PSVTMOT	2		F	
5	+PSVTMOT	2		F	
6	+PSVTMOT	2		F	
7	+PSVTMOT	2		F	
8	+PSVTMOT	2		F	
9	-PSVTMOT	6		F	
10	-PSVTMOT	6		F	
11	-PSVTMOT	6		F	
12	-PSVTMOT	6		F	
13	-PSVTMOT	6		F	
14	-PSVTMOT	6		F	
15	-PSVTMOT	6		F	
16	-PSVTMOT	6		F	
17		1		F	
18		1		F	
19		3		F	
20		3		F	
21	+ 0.0	4		F	
22	+ 0.0	4		F	
23		5		F	
24		5		F	

ELM 2
TO GRP33, ELM01 P01

PNT	SIGNAL NAME	COLOR	LV	TYPE	F
1		1		F	
2	-PSVTMOT	6		F	
3	+PSVTMOT	2		F	
4		3		F	
5	-PSVTMOT	6		F	
6	+PSVTMOT	2		F	
7	+ 0.0	4		F	
8	-PSVTMOT	6		F	
9	+PSVTMOT	2		F	
10		5		F	
11	-PSVTMOT	6		F	
12	+PSVTMOT	2		F	

./.

GRP 18 1.820.592.00 <-- <-- <-- CONTINUATION

ELM 3
TO GRP30, ELM01 P02

PNT	SIGNAL NAME	COLOR	LV	TYPE	F
1		1		F	
2	-PSVTMOT	6		F	
3	+PSVTMOT	2		F	
4		3		F	
5	-PSVTMOT	6		F	
6	+PSVTMOT	2		F	
7	+ 0.0	4		F	
8	-PSVTMOT	6		F	
9	+PSVTMOT	2		F	
10		5		F	
11	-PSVTMOT	6		F	
12	+PSVTMOT	2		F	

PUBLISHED: 12/86

WILLI STUDER AG * L O C A T I C N P I N L I S T * 86/12/08 * 10:54 * P A G E 61 *

1.861.022.00 D820X PCM RECORDER * 86/08/27 - 00

ASY 11 1.861.080.00 TAPE TRANSPORT D820X <-- <-- <-- CONTINUATION

GRP 19 1.820.591.00
SUPPLY CABLE, ELECTRONICS

ELM 1
FROM GRP32, ELM02 J01

PNT	SIGNAL NAME	COLOR	LV	TYPE	F
1	+ 5.6	3			F
2	+ 5.6	3			F
3	+5.6SENS	4			F
4	TD-C76K	9			F
5	+ 0.0	0			F
6	+ 0.0	0			F
7	T-PWRGN	5			F
8	+ 0.0	0			F
9	+ 0.0	0			F
10	+ 0.0	0			F
11	+15.0	2			F
12	-15.0	6			F
13	+ 0.0	0			F
14	+ 0.0	0			F
15	+24.0	7			F
16	+REMSUP	8			F
17	+STABSNS	3			F
18	-STABSNS	5			F
19	-26.0	9			F
20	+26.0	1			F
21	+ 0.0	0			F
22	+C.0SENS	0			F
23	0CAPMOT	4			F
24	+CAPMOT	2			F

./.

GRP 19 1.820.591.00 <-- <-- <-- CONTINUATION

ELM 2
TO GRP21, ELM02 P01

PNT	SIGNAL NAME	CCLOR	LV	TYPE	F
1	+ 5.6	3		M	
2	+ 5.6	3		M	
3	+5.6SENS	4		M	
4	TC-C76K	9		M	
5	+ 0.0	C		M	
6	+ 0.0	C		M	
7	T-PWRGN	5		M	
8	+ 0.0	C		M	
9	+ 0.0	C		M	
10	+ 0.0	C		M	
11	+15.0	2		M	
12	-15.0	6		M	
13	+ 0.0	C		M	
14	+ 0.0	C		M	
15	+24.0	7		M	
16	+REMSUP	8		M	
17	+STABSNS	3		M	
18	-STABSNS	5		M	
19	-26.0	9		M	
20	+26.0	1		M	
21	+ 0.0	0		M	
22	+C.0SENS	C		M	
23	0CAPMOT	4		M	
24	+CAPMOT	2		M	

GRP 20 1.820.701.00
BACKPANEL TAPE DECK

ELM 1
SPOOLING MOTOR DRIVE AMP. LEFT P01

PNT	SIGNAL NAME	CCLOR	LV	TYPE	F
1	+ 0.0				
2	+ 0.0				
3	+ 5.6				
4	+ 5.6				
5	+15.0				
6	-15.0				
7	PWMPL-L1				
8	PWMPL-L2				
9	PWMPL-H1				
10	PWMPL-H2				
11	PWMPL-L3				
12	PWMPL-L4				
13	AN-ICLC				
14	PWMPL-L5				
15	PWMPL-L6				
16	+ 0.0				

ELM 2
SPOOLING MOTOR DRIVE AMP. RIGHT P02

PNT	SIGNAL NAME	COLOR	LV	TYPE	F
1	+ 0.0				
2	+ 0.0				
3	+ 5.6				
4	+ 5.6				
5	+15.0				
6	-15.0				
7	PWMPR-L1				
8	PWMPR-L2				
9	PWMPR-H1				
10	PWMPR-H2				
11	PWMPR-L3				
12	PWMPR-L4				
13	AN-ICRC				
14	PWMPR-L5				
15	PWMPR-L6				
16	+ 0.0				

./.

WILLI STUDER AG * L O C A T I C N P I N L I S T * 86/12/08 * 10:54 * P A G E 62 *

1.861.022.00 D82JX PCM RECORDER * 86/08/27 - 00

ASY 11 1.861.080.00 TAPE TRANSPORT D82GX <-- <-- <-- CONTINUATION

GRP 20 1.820.701.00 <-- <-- <-- CONTINUATION

ELM 3
CAPSTAN MOTOR DRIVE AMPLIFIER P03

PNT	SIGNAL NAME	CCLOR	LV	TYPE	F
1	+ 0.0				
2	+ 0.0				
3	+ 5.6				
4	+ 5.6				
5	+15.0				
6	-15.0				
7	AN-CSPDC				
8	TD-TCM1				
9	+ 0.0				
10	TD-TCM2				
11	+ 0.0				
12	+ 0.0				
13	TC-CPREF				
14	TC-CAPDC				
15	TD-C76K				
16	+ 0.0				

ELM 4
PAR. CONT. INT. SYNCHRONIZER P04

PNT	SIGNAL NAME	COLOR	LV	TYPE	F
1	+ 0.0				
2	+ 0.0				
3	+ 5.6				
4	+ 5.6				
5	+15.0				
6	-15.0				
7					
8	TC-TCDIR				
9	+ 0.0				
10	TC-TCMV				
11	+ 0.0				
12	T-REFINT				
13	TD-CAPSY				
14	TD-MVDIR				
15	TD-MVCLK				
16	+ 0.0				

./.

GRP 20 1.820.701.00 <-- <-- <-- CONTINUATION

ELM 5
SPOOLING MOTOR SUPPLY P05

PNT	SIGNAL NAME	CCLCR	LV	TYPE	F
1	+ 0.0				
2	+ 0.0				
3	+ 5.6				
4	+ 5.6				
5	+15.0				
6	-15.0				
7	TD-C3C7K				
8	TD-PWENB				
9	+YSUP				
10	-YSUP				
11					
12					
13					
14					
15					
16					

ELM 6
EXT. SENSORS P06

PNT	SIGNAL NAME	CCLCR	LV	TYPE	F
1	+ 0.0				
2	+ 0.0				
3	+ 5.6				
4	+ 5.6				
5	+15.0				
6	-15.0				
7	TD-YTRSP				
8	TD-SHLD				
9	TD-TRSP				
10	TD-TRSPR				

./.

GRP 20 1.820.701.00 <-- <-- <-- CONTINUATION

ELM 7
TAPE LIFT MOTOR, LEFT P07

PNT	SIGNAL NAME	CCLOR	LV	TYPE	F
1	+ 0.0				
2	+ 0.0				
3	+ 5.6				
4	+ 5.6				
5	+26.0				
6	-26.0				
7					
8					
9					
10					
11	TD-RALP1				
12	TD-RALC2				
13	TD-RALP2				
14	TD-RALC1				
15	TD-RALEN				
16					

ELM 8
TAPE LIFT MOTOR, RIGHT P08

PNT	SIGNAL NAME	CCLOR	LV	TYPE	F
1	+ 0.0				
2	+ 0.0				
3	+ 5.6				
4	+ 5.6				
5	+26.0				
6	-26.0				
7					
8					
9					
10					
11	TD-RARP1				
12	TD-RARC2				
13	TD-RARP2				
14	TD-RARC1				
15	TD-RAREN				
16					

./.

PUBLISHED: 12/86

* WILLI STUDER AG * L O C A T I O N P I N L I S T * 86/12/08 * 10:54 * P A G E 63 *

* 1.861.022.00 D820X PCM RECORDER * 86/08/27 - 00 *

ASY 11 1.861.080.00 TAPE TRANSPORT D820X <-- <-- <-- CONTINUATION

GRP 20 1.820.701.00 <-- <-- <-- CONTINUATION

ELM 9
TACHO SENSOR (SPOOLING M. LEFT) P09

PNT	SIGNAL NAME	COLOR	LV	TYPE	F
1	+ 0.0				
2	+ 0.0				
3	+ 5.6				
4	+ 5.6				
5	+15.0				
6	-15.0				
7	AN-RES1				
8	TD-TML2				
9	TD-TML1				
10					

ELM 10
TACHO SENSOR (SPOOLING M. RIGHT) P10

PNT	SIGNAL NAME	COLOR	LV	TYPE	F
1	+ 0.0				
2	+ 0.0				
3	+ 5.6				
4	+ 5.6				
5	+15.0				
6	-15.0				
7	AN-RES2				
8	TD-TMR2				
9	TD-TMR1				
10					

ELM 11
MOVE SENSOR P11

PNT	SIGNAL NAME	COLOR	LV	TYPE	F
1	+ 0.0				
2	+ 0.0				
3	+ 5.6				
4	+ 5.6				
5	+15.0				
6	-15.0				
7	AN-RES3				
8	TD-MOVE2				
9	TD-MOVE1				
10					

./.

GRP 20 1.820.701.00 <-- <-- <-- CONTINUATION

ELM 12
TAPE TENSION SENSOR, LEFT P12

PNT	SIGNAL NAME	COLOR	LV	TYPE	F
1	+ 0.0				
2	+ 0.0				
3	+ 5.6				
4	+ 5.6				
5	+15.0				
6	-15.0				
7					
8					
9	AN-TTL				
10					

ELM 13
TAPE TENSION SENSOR, RIGHT P13

PNT	SIGNAL NAME	COLOR	LV	TYPE	F
1	+ 0.0				
2	+ 0.0				
3	+ 5.6				
4	+ 5.6				
5	+15.0				
6	-15.0				
7					
8					
9	AN-TTR				
10					

./.

GRP 20 1.820.701.00 <-- <-- <-- CONTINUATION

ELM 14
FUSE FAILURE DETECTOR P14

PNT	SIGNAL NAME	COLOR	LV	TYPE	F
1	+CAPMOT				
2	+CAPMOT				
3					
4	+24.0				
5	-STABSNS				
6	T-SUPVON				
7	+STABSNS				
8	+STABSNS				
9	+ 5.6				
10	+ 5.6				
11	+ 0.0				
12	+ 0.0				
13	-15.0				
14	+15.0				
15	+26.0				
16	-26.0				

./.

* WILLI STUDER AG * L O C A T I O N P I N L I S T * 86/12/08 * 10:54 * P A G E 64 *

* 1.861.022.00 D820X PCM RECORDER * 86/08/27 - 00 *

ASY 11 1.861.080.00 TAPE TRANSPORT D820X <-- <-- <-- CONTINUATION

GRP 20 1.820.701.00 <-- <-- <-- CONTINUATION

ELM 15
DISPLAY DRIVER P15

PNT	SIGNAL NAME	COLOR	LV	TYPE	F
1	+ 0.0				
2	+ 0.0				
3	+ 5.6				
4	+ 5.6				
5	+24.0				
6	+24.0				
7	TM-DSL4				
8	TM-ISL4				
9	TM-DRES				
10	TM-IRES				
11	TM-DRW				
12	TM-IRW				
13	TM-DENB				
14	TM-IENB				
15	TM-DADR2				
16	TM-IADR2				
17	TM-DADR1				
18	TM-IADR1				
19	TM-DADR0				
20	TM-IADR0				
21	TM-SHIR				
22	0.0 VCU				
23	TM-K8IR				
24	0.0 VCU				
25	TM-DATA7				
26	0.0 VCU				
27	TM-DATA6				
28	0.0 VCU				
29	TM-DATA5				
30	0.0 VCU				
31	TM-DATA4				
32	0.0 VCU				
33	TM-DATA3				
34	0.0 VCU				
35	TM-DATA2				
36	0.0 VCU				
37	TM-DATA1				
38	0.0 VCU				
39	TM-DATA0				
40	0.0 VCU				

./.

GRP 20 1.820.701.00 <-- <-- <-- CONTINUATION

ELM 16
PARALLEL REMOTE CONTROL P16

PNT	SIGNAL NAME	COLOR	LV	TYPE	F
1	+ 0.0				
2	+ 0.0				
3	+ 5.6				
4	+ 5.6				
5	+REMSUP				
6	+REMSUP				
7	TM-DSL5				
8	TM-ISL5				
9	TM-DRES				
10	TM-IRES				
11	TM-DRW				
12	TM-IRW				
13	TM-DENB				
14	TM-IENB				
15	T-REFEXT				
16	0.0 VCU				
17	TC-TCMV				
18	TC-TCDIR				
19	TM-DADR0				
20	TM-IADR0				
21	TM-REMIR				
22	0.0 VCU				
23	TC-MVCLK				
24	TD-MVDIR				
25	TM-DATA7				
26	0.0 VCU				
27	TM-DATA6				
28	0.0 VCU				
29	TM-DATA5				
30	0.0 VCU				
31	TM-DATA4				
32	0.0 VCU				
33	TM-DATA3				
34	0.0 VCU				
35	TM-DATA2				
36	0.0 VCU				
37	TM-DATA1				
38	0.0 VCU				
39	TM-DATA0				
40	0.0 VCU				

./.

GRP 20 1.820.701.00 <-- <-- <-- CONTINUATION

ELM 17
TO HEAD BLOCK ASSEMBLY P17

PNT	SIGNAL NAME	COLOR	LV	TYPE	F
1	+ 0.0				
2	+ 0.0				
3	+ 5.6				
4	+ 5.6				
5	+15.0				
6	-15.0				
7	T-SADA				
8	T-SADB				
9	T-SADC				
10	T-READSL				
11	T-WRTSL				
12	T-CT-RP1				
13	T-CT-RP2				
14	T-CT-SJM				
15	T-CT-MP				
16	T-CT-RES				
17					
18					
19					
20	+ 0.0				
21					
22	+ 0.0				
23					
24	+24.0				
25	+ 0.0				
26	+ 0.0				

./.

PUBLISHED: 12/86

WILLI STUDER AG * L O C A T I O N P I N L I S T * 86/12/08 * 10:54 * P A G E 65

1.861.022.00 D820X PCM RECORDER * 86/08/27 - 00

ASY 11 1.861.080.00 TAPE TRANSPORT D820X <-- <-- <-- CONTINUATION

GRP 20 1.820.701.00 <-- <-- <-- CONTINUATION

ELM 18
VU-METER PANEL, EXTERNAL P18

PNT	SIGNAL NAME	CCLOR	LV	TYPE	F
1	+ 0.0				
2	+ 0.0				
3	+ 5.6				
4	+ 5.6				
5	+15.0				
6	-15.0				
7	T-SADA				
8	T-SADB				
9	T-SADC				
10	T-READSL				
11	T-WRTSL				
12	T-DT-CH1				
13	T-DT-CH2				
14	T-DT-CH3				
15	T-DT-MP				
16	T-DT-RES				
17					
18					
19					
20	+ 0.0				
21	T-VARSPD				
22	+ 0.0				
23					
24	+24.0				
25	+ 0.0				
26	+ 0.0				

./.

GRP 20 1.820.701.00 <-- <-- <-- CONTINUATION

ELM 19
SOURCE SELECTOR P19

PNT	SIGNAL NAME	CCLOR	LV	TYPE	F
1	+ 0.0				
2	+ 0.0				
3	+ 5.6				
4	+ 5.6				
5	+15.0				
6	-15.0				
7	T-SADA				
8	T-SADB				
9	T-SADC				
10	T-READSL				
11	T-WRTSL				
12	T-DT-CH1				
13	T-DT-CH2				
14	T-DT-CH3				
15	T-DT-MP				
16	T-DT-RES				

ELM 30
SSDA INT. SYNCHRONIZER P20

PNT	SIGNAL NAME	CCLOR	LV	TYPE	F
1	GND				
2	TDS-CLK				
3	SYS-CTS				
4	SYS-RX				
5	SYS-CTR				
6	SYS-TX				
7					
8	GND				
9					
10					

./.

GRP 20 1.820.701.00 <-- <-- <-- CONTINUATION

ELM 31
TO GRP25. ELM04/05 P21

PNT	SIGNAL NAME	CCLOR	LV	TYPE	F
1	FRMGND				
2	TRANSCM				
3	TRANSA				
4	TRANSB				
5	RECEIVB				
6	RECEIVA				
7	RECEIVCM				
8	FRMGND				
9	SPARE				
10					

ELM 32
TO ASSY1. GR80. EL21 P24

PNT	SIGNAL NAME	CCLOR	LV	TYPE	F
1	+0.0				
2	TD-MVCLK				
3	+0.0				
4	TD-MVDIR				
5	+0.0				
6					
7	+0.0				
8	TREFINT				
9	+0.0				
10	TIREFINT				
11	+0.0				
12	TREFFXT				
13	+0.0				
14	TIREFEXT				
15	+0.0				
16					
17	+0.0				
18					
19	+0.0				
20					
21	+0.0				
22					
23	+0.0				
24					
25	+0.0				
26					

./.

WILLI STUDER AG * L O C A T I O N P I N L I S T * 86/12/08 * 10:54 * P A G E 66

1.861.022.00 D820X PCM RECORDER * 86/08/27 - 00

ASY 11 1.861.080.00 TAPE TRANSPORT D820X <-- <-- <-- CONTINUATION

GRP 20 1.820.701.00 <-- <-- <-- CONTINUATION

ELM 33
TO ASSY1, GR80, EL22 P25

PNT	SIGNAL NAME	CCLOR	LV	TYPE	F
1	+0.0				
2	TAD-RESA				
3	+0.0				
4	TAD-RESB				
5	+0.0				
6	TAD-RESC				
7	+0.0				
8	SSDACLK				
9	+0.0				
10	SSDAICLK				
11	+0.0				
12	SSDAMTX				
13	+0.0				
14	SSDAIMTX				
15	+0.0				
16	SSDADTR				
17	+0.0				
18	SSDAIDTR				
19	+0.0				
20	SSDACTS				
21	+0.0				
22	SSDAICTS				
23	+0.0				
24	SSDAMRX				
25	+0.0				
26	SSDAIMRX				

./.

GRP 20 1.820.701.00 <-- <-- <-- CONTINUATION

ELM 34
INT. SYNCHRONIZER P24

PNT	SIGNAL NAME	CCLOR	LV	TYPE	F
1	TC-SL3				
2	+ 0.0				
3	TC-SL4				
4	+ 0.0				
5	TC-IRQ				
6	+ 0.0				
7	TC-ENBG				
8	+ 0.0				
9	TC-RESMP				
10	+ 0.0				
11	+ 0.0				
12	+ 0.0				
13	+ 0.0				
14	+ 0.0				
15	TC-R/				
16	+ 0.0				
17	TC-ENB				
18	+ 0.0				
19	TC-ACR2				
20	+ 0.0				
21	TC-ADR1				
22	+ 0.0				
23	TC-ACR0				
24	+ 0.0				
25	TC-DATA7				
26	+ 0.0				
27	TC-DATA6				
28	+ 0.0				
29	TC-DATA5				
30	+ 0.0				
31	TC-DATA4				
32	+ 0.0				
33	TC-DATA3				
34	+ 0.0				
35	TC-DATA2				
36	+ 0.0				
37	TC-DATA1				
38	+ 0.0				
39	TC-DATA0				
40	+ 0.0				

./.

GRP 20 1.820.701.00 <-- <-- <-- CONTINUATION

ELM 40 1.820.759.00
SPOOLING MOTOR DRIVER J01

PNT	SIGNAL NAME	CCLOR	LV	TYPE	F
1	AN-ICR				
2	AN-IRR				
3	AN-ICR				
4	AN-IRR				
5					
6					
7	PWMPR-H1				
8	PWMPR-L3				
9	AN-ICRD				
10	PWMPR-L6				
11					
12					
13					
14					
15	TD-PENRR				
16					
17	TD-C76K				
18	+15.0				
19	KEY				
20	+ 5.6				
21	+ 0.0				
22	-15.0				
23	TD-PENBL				
24					
25					
26	AN-ICL				
27	AN-IRL				
28	PWMPL-H1				
29	PWMPL-L3				
30	AN-ICLD				
31	PWMPL-L6				
32	PWMPL-L5				
33	PWMPL-L4				
34	PWMPL-H2				
35	PWMPL-L1				
36	PWMPR-L5				
37	PWMPR-L4				
38	PWMPR-H2				
39	PWMPR-L1				

./.

PUBLISHED: 12/86

* WILLI STUDER AG * L O C A T I O N P I N L I S T * 86/12/08 * 10:54 * P A G E 67 *

* 1.861.022.00 D820X PCM RECORDER * 86/08/27 - 00 *

ASY 11 1.861.080.00 TAPE TRANSPORT D820X <-- <-- <-- CONTINUATION

GRP 20 1.820.701.00 <-- <-- <-- CONTINUATION

ELM 41 1.820.764.00 CAPSTAN CONTROL UNIT JG2

PNT	SIGNAL NAME	COLOR	LV	TYPE	F
1	TD-TCM1				
2	TD-TCM2				
3	TC-REFP				
4	TC-CAPDC				
5	TC-TCMVI				
6	TC-CDIRI				
7	TD-CAPSY				
8	TC-REF				
9	TC-INEX				
10	TC-RESMP				
11	TC-ENBG				
12					
13	TC-IRQ				
14	TC-EREF				
15	TC-SL4				
16	TC-SL3				
17					
18	+15.0				
19	KEY				
20	+ 5.6				
21	+ 0.0				
22	-15.0				
23	TC-SL2				
24	TC-SL1				
25					
26	TD-CRES				
27	TC-RW				
28	TC-ENB				
29	TC-ADR2				
30	TC-ADR1				
31	TC-ADR0				
32	TC-DATA7				
33	TC-DATA6				
34	TC-DATA5				
35	TC-DATA4				
36	TC-DATA3				
37	TC-DATA2				
38	TC-DATA1				
39	TC-DATA0				

./.

GRP 20 1.820.701.00 <-- <-- <-- CONTINUATION

ELM 42 1.820.727.00 CAPSTAN INTERFACE JG3

PNT	SIGNAL NAME	COLOR	LV	TYPE	F
1A	TC-CDIRI				
1B	TC-TCM1				
2A	TC-TCMVI				
2B	TC-TCM2				
3A	AN-CSPDC				
3B	AN-CSPDC				
4A					
4B	TC-REFP				
5A	TC-TCMV				
5B	TC-TCMV				
6A	TC-TCDIR				
6B	TC-TCDIR				
7A					
7B					
8A	TC-RESMP				
8B	TC-ENBG				
9A	TC-IRQ				
9B					
10A					
10B	TC-EREF				
11A	TC-REF				
11B	T-REFINT				
12A	TC-INEX				
12B	T-REFEXT				
13A	TC-SL1				
13B	TD-IRQ				
14A	TC-SL2				
14B	TD-SL7				
15A	+15.0				
15B	+15.0				
16A	+ 5.6				
16B	+ 5.6				
17A	+ 0.0				
17B	+ 0.0				
18A	-15.0				
18B	-15.0				
19A					
19B	TD-RES				
20A	TC-RW				
20B	TD-RW				
21A	TC-ENB				
21B	TD-ENB				
22A	TC-ADR2				
22B					
23A	TC-ADR1				
23B	TD-ADR1				
24A	TC-ADR0				

./.

GRP 20 1.820.701.00 <-- <-- <-- CONTINUATION

ELM 42 1.820.727.00 <-- <-- <-- CONTINUATION

PNT	SIGNAL NAME	COLOR	LV	TYPE	F
24B	TD-ADR0				
25A	TC-DATA7				
25B	TD-DATA7				
26A	TC-DATA6				
26B	TD-DATA6				
27A	TC-DATA5				
27B	TD-DATA5				
28A	TC-DATA4				
28B	TD-DATA4				
29A	TC-DATA3				
29B	TD-DATA3				
30A	TC-DATA2				
30B	TD-DATA2				
31A	TC-DATA1				
31B	TD-DATA1				
32A	TC-DATA0				
32B	TD-DATA0				

./.

* WILLI STUDER AG * L O C A T I O N P I N L I S T * 86/12/08 * 10:54 * P A G E 68 *

* 1.861.022.00 D820X PCM RECORDER * 86/08/27 - 00 *

ASY 11 1.861.080.00 TAPE TRANSPORT D820X <-- <-- <-- CONTINUATION

GRP 20 1.820.701.00 <-- <-- <-- CONTINUATION

ELM 43 1.820.762.00 TAPE DECK PERIPHERY CONTR. JG4

PNT	SIGNAL NAME	COLOR	LV	TYPE	F
1A	TD-RALEN				
1B	TD-RALC1				
2A	TD-RALP2				
2B	TD-RALC2				
3A	TD-RALP1				
3B	TD-RARP1				
4A	TD-MOVE				
4B	TD-RARP2				
5A	T-DRES2				
5B	TD-RAKEN				
6A	TD-CRES				
6B	TD-RARC1				
7A					
7B	TD-RARC2				
8A	TD-SHLD				
8B	T-IRES2				
9A	TD-TRSP				
9B	TD-HEACT				
10A	TD-PWENB				
10B	T-SUPVON				
11A	-YSUP				
11B					
12A	+YSUP				
12B					
13A					
13B					
14A					
14B	TD-SL3				
15A	+15.0				
15B	+15.0				
16A	+ 5.6				
16B	+ 5.6				
17A	+ 0.0				
17B	+ 0.0				
18A	-15.0				
18B	-15.0				
19A	T-IRES2				
19B	TD-RES				
20A	TD-PENBL				
20B	TD-RW				
21A	TD-PENBR				
21B	TD-ENB				
22A	T-IRES3				
22B	TD-ADR2				
23A	T-IRES4				
23B	TD-ADR1				
24A	T-IRES5				

./.

GRP 20 1.820.701.00 <-- <-- <-- CONTINUATION

ELM 43 1.820.762.00 <-- <-- <-- CONTINUATION

PNT	SIGNAL NAME	COLOR	LV	TYPE	F
24B	TD-ADR0				
25A	T-IRES6				
25B	TD-DATA7				
26A	T-IRES7				
26B	TC-DATA6				
27A	OC-RES1				
27B	TD-DATA5				
28A	OC-RES2				
28B	TD-DATA4				
29A	OC-RES3				
29B	TD-DATA3				
30A	OC-RES4				
30B	TD-DATA2				
31A	K-BRAKEL				
31B	TD-DATA1				
32A	K-BRAKER				
32B	TD-DATA0				

./.

GRP 20 1.820.701.00 <-- <-- <-- CONTINUATION

ELM 44 1.820.761.00 TAPE DECK COUNTER / TIMER JG5

PNT	SIGNAL NAME	COLOR	LV	TYPE	F
1	TD-TML1				
2	TD-TML2				
3	TD-TMR1				
4	TD-TMR2				
5					
6	TD-ADR3				
7	TD-MOVE1				
8	TD-MOVE2				
9	TD-ICRE1				
10					
11	TD-ICRE2				
12	TD-MVCLK				
13	TD-IRQ				
14	TD-MVDIR				
15					
16	TD-ICRE3				
17	TD-ICRE4				
18	+15.0				
19	KEY				
20	+ 5.6				
21	+ 0.0				
22	-15.0				
23	TC-ICRE5				
24					
25	TD-SL6				
26	TD-RFS				
27	TD-RW				
28	TD-ENB				
29	TD-ADR2				
30	TD-ADR1				
31	TD-ADR0				
32	TD-DATA7				
33	TD-DATA6				
34	TD-DATA5				
35	TD-DATA4				
36	TD-DATA3				
37	TD-DATA2				
38	TD-DATA1				
39	TD-DATA0				

./.

PUBLISHED: 12/86

```
*    WILLI STUDER AG    *    L O C A T I O N    P I N    L I S T    *  86/12/08  *  10:54  *  P A G E  69  *
*                 1.861.022.00  D820X PCM RECORDER                    *  86/08/27 - 00                      *
ASY 11          1.861.080.00  TAPE TRANSPORT D820X                                  <--  <--  <--  CONTINUATION

GRP 20          1.820.701.00
                <--  <--  <--  CONTINUATION

ELM 45          1.820.760.00
    SPOOLING MOTOR CONTROLLER                                  J06

PNT SIGNAL NAME  CCLOR LV TYPE                                  F
  1  AN-TTL
  2  AN-TTR
  3  AN-TTL
  4  AN-TTR
  5
  6  AN-IRL
  7
  8  AN-IRR
  9
 10
 11
 12
 13
 14
 15
 16
 17
 18  +15.0
 19  KEY
 20  + 5.6
 21  + 0.0
 22  -15.0
 23  TD-SL4
 24
 25
 26  TD-RES
 27  TD-RW
 28  TD-ENB
 29  TD-ADR2
 30  TD-ADR1
 31  TD-ADR0
 32  TD-DATA7
 33  TD-DATA6
 34  TD-DATA5
 35  TD-DATA4
 36  TD-DATA3
 37  TD-DATA2
 38  TD-DATA1
 39  TD-DATA0
                                                                ./.

GRP 20          1.820.701.00
                <--  <--  <--  CONTINUATION

ELM 46          1.820.785.00
    MP-UNIT TO CONTROL                                         J07

PNT SIGNAL NAME  CCLCR LV TYPE                                  F
  1  TD-P14B
  2  TD-P15B
  3  TD-SL3
  4  TD-SL2
  5  TD-RESMP
  6  TD-ADR3
  7
  8  TD-P17B
  9  TD-NMI
 10  TD-RX
 11  TD-TX
 12  TD-P16B
 13  TD-IRQ
 14  T-PWRON
 15  TD-SL7
 16  TD-C76K
 17
 18
 19  KEY
 20  + 5.6
 21  + 0.0
 22  TD-C3C7K
 23  TC-SL4
 24  TD-SL5
 25  TD-SL6
 26  TD-RESET
 27  TD-RW
 28  TD-ENB
 29  TD-ADR2
 30  TD-ADR1
 31  TD-ADR0
 32  TD-DATA7
 33  TD-DATA6
 34  TD-DATA5
 35  TD-DATA4
 36  TD-DATA3
 37  TD-DATA2
 38  TD-DATA1
 39  TD-DATA0
                                                                ./.

GRP 20          1.820.701.00
                <--  <--  <--  CONTINUATION

ELM 47          1.820.763.00
    TAPE DECK SERIAL INTERFACE                                 J08

PNT SIGNAL NAME  CCLOR LV TYPE                                  F
  1  AN-TTL
  2  AN-TTR
  3  AN-ICL
  4  AN-ICR
  5  AN-TTL
  6  AN-TTR
  7  AN-RES1
  8  AN-RES2
  9  AN-RES3
 10  AN-RES4
 11  TD-RESMP
 12  TD-IRQ
 13  TDS-RX
 14  TDS-TX
 15  TDS-DTR
 16  TDS-CTS
 17  TDS-CLK
 18  +15.0
 19  KEY
 20  + 5.6
 21  + 0.0
 22  -15.0
 23  TC-RESET
 24  TD-ADR3
 25  TD-SL5
 26  TD-RES
 27  TC-RW
 28  TD-ENB
 29  TD-ADR2
 30  TC-ADR1
 31  TD-ADR0
 32  TD-DATA7
 33  TD-DATA6
 34  TD-DATA5
 35  TC-DATA4
 36  TD-DATA3
 37  TD-DATA2
 38  TD-DATA1
 39  TD-DATA0
                                                                ./.
```

```
*    WILLI STUDER AG    *    L O C A T I O N    P I N    L I S T    *  86/12/08  *  10:54  *  P A G E  70  *
*                 1.861.022.00  D820X PCM RECORDER                    *  86/08/27 - 00                      *
ASY 11          1.861.080.00  TAPE TRANSPORT D820X                                  <--  <--  <--  CONTINUATION

GRP 20          1.820.701.00
                <--  <--  <--  CONTINUATION

ELM 48          1.820.753.00
    MASTER SERIAL INTERFACE                                    J09

PNT SIGNAL NAME  CCLOR LV TYPE                                  F
 1A TM-DSL4
 1B TM-ISL4
 2A TM-DSL5
 2B TM-ISL5
 3A TM-DRES
 3B TM-IRES
 4A TM-DRW
 4B TM-IRW
 5A TM-DENB
 5B TM-IENB
 6A TM-DADR2
 6B TM-IADR2
 7A TM-DADR1
 7B TM-IADR1
 8A TM-DADR0
 8B TM-IADR0
 9A TM-SL4
 9B TM-SL5
10A TDS-RX
10B TDS-TX
11A TDS-DTR
11B TDS-CTS
12A SYS-RX
12B SYS-TX
13A SYS-DTR
13B SYS-CTS
14A TM-SHIR
14B TM-KBIR
15A +15.0
15B +15.0
16A + 5.6
16B + 5.6
17A + 0.0
17B + 0.0
18A -15.0
18B -15.0
19A TDS-CLK
19B TM-REMIR
20A TD-HEACT
20B TM-SEIR
21A T-ORES3
21B TA-AUIR
22A TD-CAPSY
22B TM-SL2
23A TM-RESMP
23B TM-ADR3
24A TM-RES
                                                                ./.

GRP 20          1.820.701.00
                <--  <--  <--  CONTINUATION

ELM 48          1.820.753.00
                <--  <--  <--  CONTINUATION

PNT SIGNAL NAME  CCLCR LV TYPE                                  F
24B TM-IRQ
25A TD-MVDIR
25B TD-MVCLK
26A TM-RESET
26B TM-RW
27A TM-ENB
27B TM-ADR2
28A TM-ADR1
28B TM-ADR0
29A TM-DATA7
29B TM-DATA6
30A TM-DATA5
30B TM-DATA4
31A TM-DATA3
31B TM-DATA2
32A TM-DATA1
32B TM-DATA0
                                                                ./.

GRP 20          1.820.701.00
                <--  <--  <--  CONTINUATION

ELM 49          1.820.766.00
    MP-UNIT MASTER                                             J10

PNT SIGNAL NAME  CCLOR LV TYPE                                  F
  1  TM-P14B
  2  TM-P15B
  3  TM-SL3
  4  TM-SL2
  5  TM-RESMP
  6  TM-ADR3
  7
  8  TM-BUSSW
  9  TM-NMI
 10  TM-RX
 11  TM-TX
 12  TM-DRENB
 13  TM-IRQ
 14  T-PWRON
 15  TM-SL7
 16  TM-C76K
 17
 18
 19  KEY
 20  + 5.6
 21  + 0.0
 22  TM-C3C7K
 23  TM-SL4
 24  TM-SL5
 25  TM-SL6
 26  TM-RESET
 27  TM-RW
 28  TM-ENB
 29  TM-ADR2
 30  TM-ADR1
 31  TM-ADR0
 32  TM-DATA7
 33  TM-DATA6
 34  TM-DATA5
 35  TM-DATA4
 36  TM-DATA3
 37  TM-DATA2
 38  TM-DATA1
 39  TM-DATA0
                                                                ./.
```

PUBLISHED: 12/86

```
*    WILLI STUDER AG    *    L O C A T I O N    P I N    L I S T                    * 86/12/08 *  10:54  *  P A G E  71  *
*                1.861.022.00  D820X PCM RECORDER                                  * 86/08/27 - 00                        *
ASY 11          1.861.080.00  TAPE TRANSPORT D820X                                                  <--  <--  <--  CONTINUATION

GRP 20          1.820.701.00
                <--  <--  <--  CONTINUATION

ELM 50          1.820.751.00
    SMPTE/EBU INTERFACE                                              J11

PNT SIGNAL NAME  COLOR LV TYPE                                        F
  1  FRMGND
  2  TRANSCM
  3  TRANSA
  4  TRANSB
  5  RECEIVB
  6  RECEIVA
  7  RECEIVCM
  8  FRMGND
  9  RCV-232
 10  TM-RX
 11  TM-TX
 12  TM-DRENB
 13  TM-SEIR
 14  SND-232
 15  TM-BUSSW
 16  TM-SL3
 17  TM-ADR3
 18  +15.0
 19  KEY
 20  + 5.0
 21  + 0.0
 22  -15.0
 23  TM-SL4
 24  TM-SL5
 25  TM-SL6
 26  TM-RES
 27  TM-RW
 28  TM-ENB
 29  TM-ADR2
 30  TM-ADR1
 31  TM-ADR0
 32  TM-DATA7
 33  TM-DATA6
 34  TM-DATA5
 35  TM-DATA4
 36  TM-DATA3
 37  TM-DATA2
 38  TM-DATA1
 39  TM-DATA0
                                                                      ./.

GRP 20          1.820.701.00
                <--  <--  <--  CONTINUATION

ELM 51          1.861.721.00
    MASTER SYSCON INTERFACE                                          J12

PNT SIGNAL NAME  COLOR LV TYPE                                        F
 1A T-SADA
 1B T-SADB
 2A T-SADC
 2B T-READSL
 3A T-WRTSL
 3B T-DT-CH1
 4A T-DT-CH2
 4B T-DT-CH3
 5A T-DT-MP
 5B T-DT-RP1
 6A T-DT-RP2
 6B TREFINT
 7A T-DT-SJM
 7B TIREFINT
 8A T-DT-RES
 8B TREFEXT
 9A
 9B TIREFEXT
10A T-REFEXT
10B T-REFINT
11A TA-AUIR
11B
12A
12B
13A
13B
14A TM-SL6
14B
15A
15B
16A +0.0
16B +0.0
17A
17B
18A +5.6
18B +5.6
19A TM-RES
19B
20A TM-RW
20B TAD-RESA
21A TM-ENB
21B TAD-RESB
22A TM-ADR2
22B TAD-RESC
23A TM-ADR1
23B SSDACLK
24A TM-ADR0
                                                                      ./.

GRP 20          1.820.701.00
                <--  <--  <--  CONTINUATION

ELM 51          1.861.721.00
                <--  <--  <--  CONTINUATION

PNT SIGNAL NAME  COLOR LV TYPE                                        F
24B SSDAICLK
25A TM-DATA7
25B SSDAMTX
26A TM-DATA6
26B SSDAIMTX
27A TM-DATA5
27B SSDADTR
28A TM-DATA4
28B SSDAIDTR
29A TM-DATA3
29B SSDACTS
30A TM-DATA2
30B SSDAICTS
31A TM-DATA1
31B SSDAMRX
32A TM-DATA0
32B SSDAIMRX

ELM 60
    WIRE FIELD (FROM GRP20, ELM70)

PNT SIGNAL NAME  COLOR LV TYPE                                        F
  1  + 0.0          0        L
  2  + 0.0          0        L
  3  + 0.0          0        L

ELM 61
    WIRE FIELD (FROM GRP20, ELM70)

PNT SIGNAL NAME  COLOR LV TYPE                                        F
  1  -26.0          9        L
  2  +26.0          1        L
  3  + 0.0          0        L
  4  + 0.0          0        L
  5  +0.0SENS       0        L
  6  + 0.0          0        L
  7  + 0.0          0        L
  8  + 0.0          0        L
  9  -15.0          6        L
 10  +15.0          2        L
                                                                      ./.
```

```
*    WILLI STUDER AG    *    L O C A T I O N    P I N    L I S T                    * 86/12/08 *  10:54  *  P A G E  72  *
*                1.861.022.00  D820X PCM RECORDER                                  * 86/08/27 - 00                        *
ASY 11          1.861.080.00  TAPE TRANSPORT D820X                                                  <--  <--  <--  CONTINUATION

GRP 20          1.820.701.00
                <--  <--  <--  CONTINUATION

ELM 62
    WIRE FIELD

PNT SIGNAL NAME  COLOR LV TYPE                                        F
  1  + 5.6          3        L
  2  + 5.6          3        L
  3  +5.6SENS       4        U
  4  +STABSNS       3        U
  5  -STABSNS       5        U
  6  +CAPMOT        2        L
  7  +CAPMOT        2        L
  8  OCAPMOT        4        L
  9  OCAPMOT        4        L
 10  +REMSUP        8        U
 11  +24.0          7        U
 12  +24.0          7        U
 13  +24.0          7        U
 14  T-PWRON        5        U
 15  TD-C76K        9        U

ELM 63
    WIRE FIELD (TO BRAKE SOLENOIDS)

PNT SIGNAL NAME  COLOR LV TYPE                                        F
  1  K-BRAKEL       1        U
  2  K-BRAKER       4        U
                                                                      ./.

GRP 20          1.820.701.00
                <--  <--  <--  CONTINUATION

ELM 70
    FROM GRP21, ELM01                                                J13

PNT SIGNAL NAME  COLOR LV TYPE                                        F
  1  + 5.6          3        F
  2  + 5.6          3        F
  3  +5.6SENS       4        F
  4  TD-C76K        9        F
  5  + 0.0          0        F
  6  + 0.0          0        F
  7  T-PWRON        5        F
  8  + 0.0          0        F
  9  + 0.0          0        F
 10  + 0.0          0        F
 11  +15.0          2        F
 12  -15.0          6        F
 13  + 0.0          0        F
 14  + 0.0          0        F
 15  +24.0          7        F
 16  +REMSUP        8        F
 17  +STABSNS       3        F
 18  -STABSNS       5        F
 19  -26.0          9        F
 20  +26.0          1        F
 21  + 0.0          0        F
 22  +0.0SENS       0        F
 23  OCAPMOT        4        F
 24  +CAPMOT        2        F

ELM 71
    TC CAPSTAN MOTOR DRIVE AMP.

PNT SIGNAL NAME  COLOR LV TYPE                                        F
  1  OCAPMOT        4        F
  2
  3
  4
  5
  6  +CAPMOT        2        F

ELM 72
    TC BRAKE SOLENOID, LEFT

PNT SIGNAL NAME  COLOR LV TYPE                                        F
  1  +24.0          7        F
  2  K-BRAKEL       1        F
  3
                                                                      ./.

GRP 20          1.820.701.00
                <--  <--  <--  CONTINUATION

ELM 73
    TC BRAKE SOLENOID, RIGHT

PNT SIGNAL NAME  COLOR LV TYPE                                        F
  1  +24.0          7        F
  2  K-BRAKER       4        F
  3
```

PUBLISHED: 12/86

WILLI STUDER AG * L O C A T I O N P I N L I S T * 86/12/08 * 10:54 * P A G E 73

1.861.022.00 D820X PCM RECORDER * 86/08/27 - 00

ASY 11 1.861.080.00 TAPE TRANSPORT D820X <-- <-- <-- CONTINUATION

GRP 25
REMOTE CONTROL PANEL

ELM 1
CONN. AUTOLOCATOR, REMOTE TIMER J01

PNT	SIGNAL NAME	COLOR	LV	TYPE	F
1	SHIELD			B	
2				B	
3	TR-A			B	
4	KEY			B	
5	+ 5.0			B	
6				B	
7	TR-B			B	
8	SIGN.GND			B	
9	+REMSUP			B	

ELM 2
CONNECTOR SYNCHRONIZER J02

PNT	SIGNAL NAME	COLOR	LV	TYPE	F
1	+ 5.0			B	
2	BR-REW			B	
3	BR-FORW			B	
4	BR-VRSPD			B	
5	SR-VRSPD			B	
6	SR-REHSL			B	
7	OR-MVCLK			B	
8	KEY/CDIR			B	
9	BR-REC			B	
10	OR-MVDIR			B	
11	OR-CMCLK			B	
12	OR-SYENB			B	
13	IR-REFEX			B	
14	+ 5.0			B	
15	BR-PLAY			B	
16	BR-STOP			B	
17	SR-LIFT			B	
18	SR-MUTE			B	
19	SR-REC			B	
20	SR-REW			B	
21	SR-FORW			B	
22	SR-PLAY			B	
23	SR-STOP			B	
24	KEY			B	
25	+24.0REM			B	

./.

GRP 25 <-- <-- <-- CONTINUATION

ELM 3
CONN. PARALLEL REMOTE CONTROL J03

PNT	SIGNAL NAME	COLOR	LV	TYPE	F
1	+ 5.0			B	
2	BR-REW			B	
3	BR-FORW			B	
4	BR-VRSPD			B	
5	SR-VRSPD			B	
6	SR-FADRY			B	
7	BR-LOCST			B	
8	BR-FADRY			B	
9	BR-REC			B	
10	SR-RESET			B	
11	FAD1			B	
12	FAD2			B	
13	IR-REFEX			B	
14	SR-OLOC			B	
15	BR-PLAY			B	
16	BR-STOP			B	
17	SR-LIFT			B	
18	SR-LOCST			B	
19	SR-REC			B	
20	SR-REW			B	
21	SR-FORW			B	
22	SR-PLAY			B	
23	SR-STOP			B	
24	KEY			B	
25	+24.0REM			B	

ELM 4
CONNECTOR SMPTE/EBU BUS J04

PNT	SIGNAL NAME	COLOR	LV	TYPE	F
1	FRMGND			B	
2	TRANSA			B	
3	RECEIVB			B	
4	RECEIVCM			B	
5	SPARE			B	
6	TRANSCM			B	
7	TRANSB			B	
8	RECEIVA			B	
9	FRMGND			B	

./.

GRP 25 <-- <-- <-- CONTINUATION

ELM 5
CONNECTOR SMPTE/EBU BUS J05

PNT	SIGNAL NAME	COLOR	LV	TYPE	F
1	FRMGND			B	
2	TRANSA			B	
3	RECEIVB			B	
4	RECEIVCM			B	
5	SPARE			B	
6	TRANSCM			B	
7	TRANSB			B	
8	RECEIVA			B	
9	FRMGND			B	

WILLI STUDER AG * L O C A T I O N P I N L I S T * 86/12/08 * 10:54 * P A G E 74

1.861.022.00 D820X PCM RECORDER * 86/08/27 - 00

ASY 11 1.861.080.00 TAPE TRANSPORT D820X <-- <-- <-- CONTINUATION

GRP 26 1.820.729.00
SERIAL REMOTE INTERFACE

ELM 1
FROM GRP27, ELM01 P01

PNT	SIGNAL NAME	COLOR	LV	TYPE	F
1	+ 5.0				
2	+ 5.0				
3	+REMSUP				
4	T-RL0				
5	T-RL1				
6	T-SL3				
7	T-A3				
8	T-B0				
9	T-A1				
10	T-A2				
11	T-B3				
12	T-A0				
13	T-B1				
14	T-B2				
15	T-B0				
16	T-SL0				
17	T-SL1				
18	T-RL7				
19	T-RL6				
20	T-OE				
21	T-SL2				
22	T-RL5				
23	T-RL4				
24	T-RESET				
25	T-RL3				
26	T-RL2				

ELM 2
TO GRP25, ELM01 P02

PNT	SIGNAL NAME	COLOR	LV	TYPE	F
1	SHIELD				
2					
3					
4	TR-B				
5	TR-A				
6	SIGN.GND				
7	KEY				
8	+REMSUP				
9	+ 5.0				
10					

GRP 27 1.820.738.00
PARALLEL REMOTE INTERFACE

ELM 1
TO GRP26, ELM01 P01

PNT	SIGNAL NAME	COLOR	LV	TYPE	F
1	+ 5.0				
2	+ 5.0				
3	+REMSUP				
4	T-RL0				
5	T-RL1				
6	T-SL3				
7	T-A3				
8	T-B0				
9	T-A1				
10	T-A2				
11	T-B3				
12	T-A0				
13	T-B1				
14	T-B2				
15	T-B0				
16	T-SL0				
17	T-SL1				
18	T-RL7				
19	T-RL6				
20	T-OE				
21	T-SL2				
22	T-RL5				
23	T-RL4				
24	T-RESET				
25	T-RL3				
26	T-RL2				

./.

GRP 27 1.820.738.00
<-- <-- <-- CONTINUATION

ELM 2
FROM GRP20, ELM16 P02

PNT	SIGNAL NAME	COLOR	LV	TYPE	F
1	+ 5.0				
2	+ 5.0				
3	+ 5.6				
4	+ 5.6				
5	+REMSUP				
6	+REMSUP				
7	TM-OSL5				
8	TM-ISL5				
9	TM-DRES				
10	TM-IRES				
11	TM-DRW				
12	TM-IRW				
13	TM-DENB				
14	TM-IENB				
15	T-RFFEXT				
16	0.0 VCU				
17	TC-TCMV				
18	TC-TCDIR				
19	TM-DADRO				
20	TM-IADRO				
21	TM-REMIR				
22	0.0 VCU				
23	TD-MVCLK				
24	TD-MVDIR				
25	TM-DATA7				
26	0.0 VCU				
27	TM-DATA6				
28	0.0 VCU				
29	TM-DATA5				
30	0.0 VCU				
31	TM-DATA4				
32	0.0 VCU				
33	TM-DATA3				
34	0.0 VCU				
35	TM-DATA2				
36	0.0 VCU				
37	TM-DATA1				
38	0.0 VCU				
39	TM-DATA0				
40	0.0 VCU				

./.

PUBLISHED: 12/86

```
*    WILLI STUDER AG    *    L O C A T I O N    P I N    L I S T              * 86/12/08 * 10:54 *  P A G E  75   *
*                1.861.022.00  D820X PCM RECORDER                             * 86/08/27 - 00                      *
ASY 11          1.861.080.00  TAPE TRANSPORT D820X                                          <--  <--  <--  CONTINUATION

GRP 27          1.820.738.00
                <--  <--  <--  CONTINUATION

ELM  3
     TO CONNECTOR SYNCHRONIZER                                   P03
PNT  SIGNAL NAME   COLOR  LV  TYPE                                F
  1  + 0.0
  2  + 0.0
  3  BR-REW
  4  BR-PLAY
  5  BR-FORW
  6  BR-STOP
  7  BR-VRSPD
  8  SR-LIFT
  9  SR-VRSPD
 10  SR-MUTE
 11  SR-REMSL
 12  SR-REC
 13  OR-MVCLK
 14  SR-REW
 15  KEY/CDIR
 16  SR-FORW
 17  BR-REC
 18  SR-PLAY
 19  OR-MVDIR
 20  SR-STOP
 21  OR-CMCLK
 22  KEY
 23  OR-SYENB
 24  +24.0REM
 25  IR-REFEX
 26

./.

GRP 27          1.820.738.00
                <--  <--  <--  CONTINUATION

ELM  4
     TO CONN. PARALLEL REMOTE CONTR.                             P04
PNT  SIGNAL NAME   COLOR  LV  TYPE                                F
  1  + 0.0
  2  SR-LOCC
  3  BR-REW
  4  BR-PLAY
  5  BR-FORW
  6  BR-STOP
  7  BR-VRSPD
  8  SR-LIFT
  9  SR-VRSPD
 10  SR-LOCST
 11  SR-FADRY
 12  SR-REC
 13  BR-LOCST
 14  SR-REW
 15  BR-FADRY
 16  SR-FORW
 17  BR-REC
 18  SR-PLAY
 19  SR-RESET
 20  SR-STOP
 21  FAD1
 22  KEY
 23  FAD2
 24  +24.0REM
 25  IR-REFEX
 26

ELM  5
                                                                 P05
PNT  SIGNAL NAME   COLOR  LV  TYPE                                F
  1  GND                                 Y

GRP 30          1.820.775.00
     SPOOLING MOTOR DRIVE AMPLIFIER RIGHT

ELM  1
     FROM GRP31, ELM01                                           J01
PNT  SIGNAL NAME   COLOR  LV  TYPE                                F
  1                                      M
  2  -PSVTMOT                            M
  3  +PSVTMOT                            M
  4                                      M
  5  -PSVTMOT                            M
  6  +PSVTMOT                            M
  7  + 0.0                               M
  8  -PSVTMOT                            M
  9  +PSVTMOT                            M
 10                                      M
 11  -PSVTMOT                            M
 12  +PSVTMOT                            M

ELM  2
     FROM GRP20, ELM02                                           P0.
PNT  SIGNAL NAME   COLOR  LV  TYPE                                F
  1  + 0.0
  2  + 0.0
  3  + 5.6
  4  + 5.6
  5  +15.0
  6  -15.0
  7  PWMPR-L1
  8  PWMPR-L2
  9  PWMPR-H1
 10  PWMPR-H2
 11  PWMPR-L3
 12  PWMPR-L4
 13  AN-ICRD
 14  PWMPR-L5
 15  PWMPR-L6
 16  + 0.0

ELM  3
                                                                 P02
PNT  SIGNAL NAME   COLOR  LV  TYPE                                F
  1  +VMOTRHT                            J
  2  -VMOTRHT                            J
```

```
*    WILLI STUDER AG    *    L O C A T I C N    P I N    L I S T              * 86/12/08 * 10:54 *  P A G E  76   *
*                1.861.022.00  D820X PCM RECORDER                             * 86/08/27 - 00                      *
ASY 11          1.861.080.00  TAPE TRANSPORT D820X                                          <--  <--  <--  CONTINUATION

GRP 31          1.820.777.00
     SPOOLING MOTOR SUPPLY

ELM  1
     OUTPUT                                                      P01
PNT  SIGNAL NAME   COLOR  LV  TYPE                                F
  1  +PSVTMOT                            M
  2  +PSVTMOT                            M
  3  +PSVTMOT                            M
  4  +PSVTMOT                            M
  5  +PSVTMOT                            M
  6  +PSVTMOT                            M
  7  +PSVTMOT                            M
  8  +PSVTMOT                            M
  9  -PSVTMOT                            M
 10  -PSVTMOT                            M
 11  -PSVTMOT                            M
 12  -PSVTMOT                            M
 13  -PSVTMOT                            M
 14  -PSVTMOT                            M
 15  -PSVTMOT                            M
 16  -PSVTMOT                            M
 17                                      M
 18                                      M
 19                                      M
 20                                      M
 21  + 0.0                               M
 22  + 0.0                               M
 23                                      M
 24                                      M

ELM  2
     FROM GRP08, ELM05                                           J01
PNT  SIGNAL NAME   COLOR  LV  TYPE                                F
  1  ACPWM-A1                            F
  2  ACPWM-A3                            F
  3  ACPWM-A5                            F
  4  ACPWM-A2                            F
  5  ACPWM-A4                            F
  6  ACPWM-A6                            F
  7  ACPWM-B1                            M
  8  ACPWM-B2                            M
  9  ACPWM-B3                            M
 10  ACPWM-B4                            M
 11  ACPWM-B5                            M
 12  ACPWM-B6                            M

./.

GRP 31          1.820.777.00
                <--  <--  <--  CONTINUATION

ELM  3
     FROM GRP20, ELM05                                           P02
PNT  SIGNAL NAME   COLOR  LV  TYPE                                F
  1  + 0.0
  2  + 0.0
  3  + 5.6
  4  + 5.6
  5  +15.0
  6  -15.0
  7  TC-C307K
  8  TD-PWENB
  9  +YSUP
 10  -YSUP
 11
 12
 13
 14
 15
 16

ELM  4
     CONNECTOR TO CAPACITOR (GRP34)                              P03
PNT  SIGNAL NAME   COLOR  LV  TYPE                                F
  1  +PSVTMOT                            F
  2  +PSVTMOT                            F
  3  +PSVTMOT                            F
  4  -PSVTMOT                            F
  5  -PSVTMOT                            F
  6  -PSVTMOT                            F

GRP 32          1.820.790.00
     SWITCHING STABILIZER

ELM  1
     INPUT FROM GRP12, ELM05                                     J01
PNT  SIGNAL NAME   COLOR  LV  TYPE                                F
  1  +STABIN                             F
  2  + 0.0                               F
  3  + 0.0                               F
  4  +STABIN                             F
  5  + 0.0                               F
  6  -STABIN                             F
  7  +CAPMOT                             F
  8
  9  OCAPMOT                             F
 10  ACPWE-D1                            F
 11
 12  ACPWE-B1                            F

ELM  2
     OUTPUT                                                      P01
PNT  SIGNAL NAME   COLOR  LV  TYPE                                F
  1  + 5.6                               M
  2  + 5.6                               M
  3  +5.6SENS                            M
  4  TD-C76K                             M
  5  + 0.0                               M
  6  + 0.0                               M
  7  T-PWRON                             M
  8  + 0.0                               M
  9  + 0.0                               M
 10  + 0.0                               M
 11  +15.0                               M
 12  -15.0                               M
 13  + 0.0                               M
 14  + 0.0                               M
 15  +24.0                               M
 16  +REMSUP                             M
 17  +STABSNS                            M
 18  -STABSNS                            M
 19  -26.0                               M
 20  +26.0                               M
 21  + 0.0                               M
 22  +0.0SENS                            M
 23  OCAPMOT                             M
 24  +CAPMOT                             M
```

PUBLISHED: 12/86

WILLI STUDER AG * L O C A T I O N P I N L I S T * 86/12/08 * 10:54 * P A G E 77
1.861.022.00 D820X PCM RECORDER * 86/08/27 - 00
ASY 11 1.861.080.00 TAPE TRANSPORT D820X <-- <-- <-- CONTINUATION

GRP 33 1.820.775.00
SPOOLING MOTOR DRIVE AMPLIFIER LEFT

ELM 1
FROM GRP31, ELM01 J01

PNT	SIGNAL NAME	COLOR	LV	TYPE	F
1			M		
2	-PSVTMOT		M		
3	+PSVTMOT		M		
4			M		
5	-PSVTMOT		M		
6	+PSVTMOT		M		
7	+ 0.0		M		
8	-PSVTMOT		M		
9	+PSVTMOT		M		
10			M		
11	-PSVTMOT		M		
12	+PSVTMOT		M		

ELM 2
FROM GRP20, ELM01 P01

PNT	SIGNAL NAME	COLOR	LV	TYPE	F
1	+ 0.0				
2	+ 0.0				
3	+ 5.6				
4	+ 5.6				
5	+15.0				
6	-15.0				
7	PWMPL-L1				
8	PWMPL-L2				
9	PWMPL-M1				
10	PWMPL-M2				
11	PWMPL-L3				
12	PWMPL-L4				
13	AN-ICLD				
14	PWMPL-L5				
15	PWMPL-L6				
16	+ 0.0				

ELM 3
P02

PNT	SIGNAL NAME	COLOR	LV	TYPE	F
1	+VMOTLFT		J		
2	-VMOTLFT		J		

GRP 34 59.26.6223
CAPACITOR, BELONGING TO GRP 31

ELM 1
CAPACITOR

PNT	SIGNAL NAME	CCLCR	LV	TYPE	F
1A	+PSVTMOT	2	L		
1B	+PSVTMOT	2	L		
1C	+PSVTMOT	2	L		
2A	-PSVTMOT	6	L		
2B	-PSVTMOT	6	L		
2C	-PSVTMOT	6	L		

ELM 2
CONNECTOR (FROM GRP31) J01

PNT	SIGNAL NAME	CCLCR	LV	TYPE	F
1	+PSVTMOT	2	M		
2	+PSVTMOT	2	M		
3	+PSVTMOT	2	M		
4	-PSVTMOT	6	M		
5	-PSVTMOT	6	M		
6	-PSVTMOT	6	M		

GRP 36 1.820.190.00
TORQUE MOTOR, LEFT

ELM 1 1.820.771.00
TACHO SENSOR P01

PNT	SIGNAL NAME	COLOR	LV	TYPE	F
1	+ 0.0				
2	+ 0.0				
3	+ 5.6				
4	+ 5.6				
5	+15.0				
6	-15.0				
7	AN-RES1				
8	TD-TML2				
9	TD-TML1				
10					

ELM 2
FROM GRP33, ELM 03

PNT	SIGNAL NAME	COLOR	LV	TYPE	F
1	+VMOTLFT	2			
2	-VMOTLFT	0			

WILLI STUDER AG * L O C A T I O N P I N L I S T * 86/12/08 * 10:54 * P A G E 78
1.861.022.00 D820X PCM RECORDER * 86/08/27 - 00
ASY 11 1.861.080.00 TAPE TRANSPORT D820X <-- <-- <-- CONTINUATION

GRP 37 1.820.190.00
TORQUE MOTOR, RIGHT

ELM 1 1.820.771.00
TACHO SENSOR P01

PNT	SIGNAL NAME	COLOR	LV	TYPE	F
1	+ 0.0				
2	+ 0.0				
3	+ 5.6				
4	+ 5.6				
5	+15.0				
6	-15.0				
7	AN-RES2				
8	TD-TMR2				
9	TD-TMR1				
10					

ELM 2
FROM GRP30, ELM 03

PNT	SIGNAL NAME	COLOR	LV	TYPE	F
1	+VMOTRHT	2			
2	-VMOTRHT	0			

GRP 38 1.021.695.00
CAPSTAN MOTOR (ELECTRONICS BOARD)

ELM 1
FROM GRP39, ELM02 J01

PNT	SIGNAL NAME	CCLCR	LV	TYPE	F
1	CPHASE-R	2		F	
2	CPHASE-T	9		F	
3	CPHASE-S	0		F	
4	TC-HALL1			F	
5					
6	+15.0			F	
7	TC-HALL2			F	
8	TD-TCM1			F	
9	+ 5V			F	
10	TC-HALL3			F	
11	TD-TCM2			F	
12	+ 0.0			F	

ELM 2 1.021.696.00
TACHO SENSOR UNIT (WIRE FIELD)

PNT	SIGNAL NAME	CCLCR	LV	TYPE	F
1		3	U		
2		4	U		
3		5	U		
4		6	U		

ELM 3 1.021.697.00
HALL SENSOR BOARD (WIRE FIELD)

PNT	SIGNAL NAME	CCLCR	LV	TYPE	F
1		0	U		
2		2	U		
3		3	U		
4		4	U		
5		5	U		
6		6	U		
7		7	U		
8		8	U		

./.

GRP 38 1.021.695.00
<-- <-- <-- CONTINUATION

ELM 4
STATOR (WIRE FIELD)

PNT	SIGNAL NAME	CCLCR	LV	TYPE	F
1	CPHASE-R	2	L		
2	CPHASE-S	0	L		
3	CPHASE-T	9	L		

ELM 5
GROUND CONNECTION (WIRE FIELD)

PNT	SIGNAL NAME	CCLCR	LV	TYPE	F
1	GND	0	L		

PUBLISHED: 12/86

```
*   WILLI STUDER AG   *   L O C A T I O N   P I N   L I S T   * 86/12/08 * 10:54 * P A G E 79 *
*                 1.861.022.00  D820X PCM RECORDER                * 86/08/27 - 00               *
ASY 11          1.861.080.00  TAPE TRANSPORT D820X                          <--  <--  <--  CONTINUATION
```

GRP 39 1.820.774.00
CAPSTAN MOTOR DRIVE AMPLIFIER

ELM 1
FROM GRP20, ELM03 P01

PNT	SIGNAL NAME	COLOR	LV	TYPE	F
1	+ 0.0				
2	+ 0.0				
3	+ 5.6				
4	+ 5.6				
5	+15.0				
6	-15.0				
7	AN-CSPDC				
8	TD-TCM1				
9	+ 0.0				
10	TD-TCM2				
11	T-SPDSL1				
12	T-SPDSL2				
13	TC-CPREF				
14	TC-CAPDC				
15	TD-C76K				
16	+ 0.0				

ELM 2
TO GRP38, ELM01 P02

PNT	SIGNAL NAME	COLOR	LV	TYPE	F
1	CPHASE-R			M	
2	CPHASE-T			M	
3	CPHASE-S			M	
4	TC-HALL1			M	
5	-15.0			M	
6	+15.0			M	
7	TC-HALL2			M	
8	TD-TCM1			M	
9	+ 5V			M	
10	TC-HALL3			M	
11	TD-TCM2			M	
12	+ 0.0			M	

/

GRP 39 1.820.774.00
<-- <-- <-- CONTINUATION

ELM 3
FROM GRP20, ELM71 P03

PNT	SIGNAL NAME	COLOR	LV	TYPE	F
1	OCAPMOT			M	
2					
3					
4					
5					
6	+CAPMOT			M	

GRP 40 1.080.230.00
BRAKE ASSEMBLY, LEFT

ELM 1
BRAKE SOLENOID

PNT	SIGNAL NAME	COLOR	LV	TYPE	F
1	+24.0		7	M	
2	K-BRAKEL		1	M	
3					

```
*   WILLI STUDER AG   *   L O C A T I O N   P I N   L I S T   * 86/12/08 * 10:54 * P A G E 80 *
*                 1.861.022.00  D820X PCM RECORDER                * 86/08/27 - 00               *
ASY 11          1.861.080.00  TAPE TRANSPORT D820X                          <--  <--  <--  CONTINUATION
```

GRP 41 1.080.240.00
BRAKE ASSEMBLY, RIGHT

ELM 1
BRAKE SOLENOID

PNT	SIGNAL NAME	COLOR	LV	TYPE	F
1	+24.0		7	M	
2	K-BRAKER		4	M	
3					

GRP 42 1.820.772.00
TAPE TENSION SENSOR, LEFT

ELM 1
FROM GRP20, ELM12 P01

PNT	SIGNAL NAME	COLOR	LV	TYPE	F
1	+ 0.0				
2	+ 0.0				
3	+ 5.6				
4	+ 5.6				
5	+15.0				
6	-15.0				
7					
8					
9	AN-TTL				
10					

GRP 43 1.820.772.00
TAPE TENSION SENSOR, RIGHT

ELM 1
FROM GRP20, ELM13 P01

PNT	SIGNAL NAME	COLOR	LV	TYPE	F
1	+ 0.0				
2	+ 0.0				
3	+ 5.6				
4	+ 5.6				
5	+15.0				
6	-15.0				
7					
8					
9	AN-TTR				
10					

```
*   WILLI STUDER AG   *   L O C A T I O N   P I N   L I S T   * 86/12/08 * 10:54 * P A G E 81 *
*                 1.861.022.00  D820X PCM RECORDER                * 86/08/27 - 00               *
ASY 11          1.861.080.00  TAPE TRANSPORT D820X                          <--  <--  <--  CONTINUATION
```

GRP 44 1.820.793.00
OPTO SENSOR

ELM 1
FROM GRP20, ELM06 P01

PNT	SIGNAL NAME	COLOR	LV	TYPE	F
1	+ 0.0				
2	+ 0.0				
3	+ 5.6				
4	+ 5.6				
5	+15.0				
6	-15.0				
7	TD-YTRSP				
8	TD-SHLD				
9	TD-TRSP				
10	TD-TRSPR				

GRP 45 1.820.770.00
MOVE SENSOR

ELM 1
FROM GRP20, ELM11 P01

PNT	SIGNAL NAME	COLOR	LV	TYPE	F
1	+ 0.0				
2	+ 0.0				
3	+ 5.6				
4	+ 5.6				
5	+15.0				
6	-15.0				
7	AN-RES3				
8	TD-MOVE2				
9	TD-MOVE1				
10					

GRP 46 1.820.773.00
TAPE LIFTER CONTROL, LEFT

ELM 1
FROM GRP20, ELM07 P01

PNT	SIGNAL NAME	COLOR	LV	TYPE	F
1	+ 0.0				
2	+ 0.0				
3	+ 5.6				
4	+ 5.6				
5	+26.0				
6	-26.0				
7					
8					
9					
10					
11	TD-RALP1				
12	TD-RALC2				
13	TD-RALP2				
14	TD-RALC1				
15	TD-RALFN				
16					

PUBLISHED: 12/86

WILLI STUDER AG * L O C A T I O N P I N L I S T * 86/12/08 * 10:54 * P A G E 82

1.861.022.00 D820X PCM RECORDER * 86/08/27 - 00

ASY 11 1.861.080.00 TAPE TRANSPORT D820X <-- <-- <-- CONTINUATION

GRP 47 1.820.773.00
TAPE LIFTER CONTROL, RIGHT

ELM 1
FROM GRP20, ELM08 PO1

PNT	SIGNAL NAME	COLOR	LV	TYPE	F
1	+ 5.6				
2	+ 5.6				
3	+ 5.6				
4	+ 5.6				
5	+26.0				
6	-26.0				
7					
8					
9					
10					
11	TD-RARP1				
12	TD-RARC2				
13	TD-RARP2				
14	TD-RARC1				
15	TD-RAREN				
16					

GRP 48 1.820.240.00
PUSHBUTTON ASSEMBLY

ELM 1
FROM GRP50, ELM03

PNT	SIGNAL NAME	COLOR	LV	TYPE	F
1	+ 0.0				
2	+ 0.0				
3	+ 5.6				
4	+ 5.6				
5	+24.0L				
6	BM-0.2				
7	BM-0.3				
8	BM-0.4				
9	BM-0.5				
10	BM-0.6				
11	BM-0.7				
12	TM-EN0				
13	TM-RL7				
14	TM-RL6				
15	TM-RL5				
16	TM-RL4				
17	TM-RL3				
18	TM-RL2				
19	TM-RL1				
20	TM-CUE1				
21					
22	TM-CUE2				
23					
24	ANM-SH3				
25	ANM-SH2				
26	ANM-SH1				

ELM 2
CONNECTOR EDIT ASSEMBLY

PNT	SIGNAL NAME	COLOR	LV	TYPE	F
1	+ 0.0				
2	+ 0.0				
3	+ 5.0				
4	TM-EN0				
5	TM-CUE1				
6	TM-RL1				
7	TM-CUE2				
8	ANM-SH1				
9	ANM-SH3				
10	ANM-SH2				

./.

GRP 48 1.820.240.00
<-- <-- <-- CONTINUATION

ELM 3
WIRE FIELD

PNT	SIGNAL NAME	COLOR	LV	TYPE	F
1	+24.0L				
2	+24.0L				
3	BM-0.7				
4	BM-0.6				
5	BM-0.5				
6	BM-0.4				
7	BM-0.3				
8	BM-0.2				
9					
10					

WILLI STUDER AG * L O C A T I O N P I N L I S T * 86/12/08 * 10:54 * P A G E 83

1.861.022.00 D820X PCM RECORDER * 86/08/27 - 00

ASY 11 1.861.080.00 TAPE TRANSPORT D820X <-- <-- <-- CONTINUATION

GRP 49 1.820.250.00
EDIT ASSEMBLY

ELM 1
FROM GRP48, ELM02

PNT	SIGNAL NAME	COLOR	LV	TYPE	F
1	+ 0.0				
2	+ 0.0				
3	+ 5.0				
4	TM-EN0				
5	TM-CUE1				
6	TM-RL1				
7	TM-CUE2				
8	ANM-SH1				
9	ANM-SH3				
10	ANM-SH2				

ELM 2
WIRE FIELD

PNT	SIGNAL NAME	COLOR	LV	TYPE	F
1	+ 5.0				
2	TM-EN0				
3					
4	TM-RL1				
5	+ 0.0				

GRP 50 1.820.768.00
TAPE DECK DISPLAY DRIVER

ELM 1
FROM GRP20, ELM15 PO1

PNT	SIGNAL NAME	COLOR	LV	TYPE	F
1	+ 0.0				
2	+ 0.0				
3	+ 5.6				
4	+ 5.6				
5	+24.0				
6	+24.0				
7	TM-DSL4				
8	TM-ISL4				
9	TM-DRES				
10	TM-IRES				
11	TM-DRW				
12	TM-IRW				
13	TM-DENB				
14	TM-IENB				
15	TM-DADR2				
16	TM-IADR2				
17	TM-DADR1				
18	TM-IADR1				
19	TM-DADR0				
20	TM-IADR0				
21	TM-SHIR				
22	0.0 VCU				
23	TM-KBIR				
24	0.0 VCU				
25	TM-DATA7				
26	0.0 VCU				
27	TM-DATA6				
28	0.0 VCU				
29	TM-DATA5				
30	0.0 VCU				
31	TM-DATA4				
32	0.0 VCU				
33	TM-DATA3				
34	0.0 VCU				
35	TM-DATA2				
36	0.0 VCU				
37	TM-DATA1				
38	0.0 VCU				
39	TM-DATA0				
40	0.0 VCU				

./.

GRP 50 1.820.768.00
<-- <-- <-- CONTINUATION

ELM 2
CONNECTOR COMMAND UNIT PO3

PNT	SIGNAL NAME	COLOR	LV	TYPE	F
1	+ 0.0				
2	+ 0.0				
3	+ 5.6				
4	+ 5.6				
5					
6	TM-EN4				
7	TM-EN3				
8	TM-EN2				
9	TM-EN1				
10	TM-RL6				
11	TM-RL7				
12	TM-RL0				
13	TM-RL1				
14	TM-RL2				
15	TM-RL3				
16	TM-RL4				
17	TM-RL5				
18	TM-8				
19	TM-DP				
20	TM-A				
21	TM-C				
22	TM-D				
23	TM-F				
24	TM-E				
25	TM-G				
26	TM-09				
27	TM-08				
28	TM-07				
29	TM-06				
30	TM-05				
31	TM-04				
32	TM-03				
33	TM-02				
34	TM-01				
35	TM-00				
36	TM-L2				
37	TM-L1				
38	TM-L3				
39					
40					

./.

PUBLISHED: 12/86

```
*   WILLI STUDER AG   *   L O C A T I C N   P I N   L I S T          * 86/12/08 * 10:54 *  P A G E  84  *
*           1.861.022.00  D820X PCM RECORDER                                 * 86/08/27 - 00                 *
ASY 11      1.861.080.00  TAPE TRANSPORT D82CX                                          <--  <--  <--  CONTINUATION

GRP 50      1.820.768.00
          <--  <--  <--  CONTINUATION

ELM  3
    CONNECTOR PUSHBUTTON ASSEMBLY      P02

PNT SIGNAL NAME  COLOR LV TYPE          F

 1  + 0.0
 2  + 0.0
 3  + 5.6
 4  + 5.6
 5  +24.0L
 6  BM-0.2
 7  BM-0.3
 8  BM-0.4
 9  BM-0.5
10  BM-0.6
11  BM-0.7
12  TM-EN0
13  TM-RL7
14  TM-RL6
15  TM-RL5
16  TM-RL4
17  TM-RL3
18  TM-RL2
19  TM-RL1
20  TM-CUE1
21
22  TM-CUE2
23
24  ANM-SH3
25  ANM-SH2
26  ANM-SH1
                                    ./.

GRP 50      1.820.768.00
          <--  <--  <--  CONTINUATION

ELM  4
    CONNECTOR LCD DISPLAY UNIT         P04

PNT SIGNAL NAME  COLOR LV TYPE          F

 1  + 0.0
 2  + 5.0
 3  TL-CS
 4  TL-ENB
 5  TL-WR
 6  TL-A0
 7  TL-D0
 8  TL-D1
 9  TL-D2
10  TL-D3
11  TL-D4
12  TL-D5
13  TL-D6
14  TL-D7
15  TL-RESET
16   0.0

GRP 51      1.820.230.00
    COMMAND UNIT

ELM  1
    FROM GRP50.ELM02

PNT SIGNAL NAME  COLOR LV TYPE          F

 1  + 0.0
 2  + 0.0
 3  + 5.6
 4  + 5.6
 5
 6  TM-EN4
 7  TM-EN3
 8  TM-EN2
 9  TM-EN1
10  TM-RL6
11  TM-RL7
12  TM-RL0
13  TM-RL1
14  TM-RL2
15  TM-RL3
16  TM-RL4
17  TM-RL5
18  TM-B
19  TM-OP
20  TM-A
21  TM-C
22  TM-D
23  TM-F
24  TM-E
25  TM-G
26  TM-D9
27  TM-D8
28  TM-D7
29  TM-D6
30  TM-D5
31  TM-D4
32  TM-D3
33  TM-D2
34  TM-D1
35  TM-D0
36  TM-L2
37  TM-L1
38  TM-L3
39
40
```

```
*   WILLI STUDER AG   *   L O C A T I C N   P I N   L I S T          * 86/12/08 * 10:54 *  P A G E  85  *
*           1.861.022.00  D820X PCM RECORDER                                 * 86/08/27 - 00                 *
ASY 11      1.861.080.00  TAPE TRANSPORT D82CX                                          <--  <--  <--  CONTINUATION

GRP 52      1.820.233.00
    LCD DISPLAY UNIT

ELM  1
    FROM GRP50, ELM04

PNT SIGNAL NAME  COLOR LV TYPE          F

 1  + 0.0
 2  + 5.0
 3  TL-CS
 4  TL-ENB
 5  TL-WR
 6  TL-A0
 7  TL-D0
 8  TL-D1
 9  TL-D2
10  TL-D3
11  TL-D4
12  TL-D5
13  TL-D6
14  TL-D7
15  TL-RESET
16   0.0

GRP 59      1.820.737.00
    FUSE/SUPPLY FAILURE DETECTOR

ELM  1
    FROM GRP20, ELM14                  P01

PNT SIGNAL NAME  COLOR LV TYPE          F

 1  +CAPMOT
 2  +CAPMCT
 3
 4  +24.0
 5  -STABSNS
 6  T-SUPVON
 7  +STABSNS
 8  +STABSNS
 9  + 5.6
10  + 5.6
11  + 0.0
12  + 0.0
13  -15.0
14  +15.0
15  +26.0
16  -26.0
```

PUBLISHED: 12/86

WILLI STUDER AG * S I G N A L W I R E L I S T * 86/12/08 * 10:54 * P A G E 86 *

1.861.022.00 D820X PCM RECORDER * 86/08/27 - 00

SIGNAL NAME	COLOR	MI	ASY	GRP	ELM	PNT	S	LV	TYPE	DESCRIPTION OF ELEMENT	REMARK	ELEMENT NR.
0.0			11	50	4	16				CONNECTOR LCD DISPLAY UNIT P04		
			11	52	1	16				FROM GRP50, ELM04		
+ 0.0	0		11	11	1	4			L	RECTIFIER DZ01		70.01.0231
	2		11	11	2	3			L	RECTIFIER DZ02		70.01.0231
	3		11	12	1	2			L	CAPACITOR C01		59.26.7103
	5		11	12	2	2			L	CAPACITOR C02		59.26.7103
	7		11	12	3	1			L	CAPACITOR C03		59.26.7103
	0		11	12	5	2			M	CONNECTOR TO GRP32, ELM01 P01		
	2		11	12	5	3			M	CONNECTOR TO GRP32, ELM01 P01		
	0		11	12	5	5			M	CONNECTOR TO GRP32, ELM01 P01		
	4		11	18	1	21			F	FROM GRP31, ELM01 J01		
	4		11	18	1	22			F	FROM GRP31, ELM01 J01		
	4		11	18	2	7			F	TO GRP33, ELM01 P01		
	4		11	18	3	7			F	TO GRP30, ELM01 P02		
	3		11	19	1	5			F	FROM GRP32, ELM02 J01		
	3		11	19	1	6			F	FROM GRP32, ELM02 J01		
	3		11	19	1	8			F	FROM GRP32, ELM02 J01		
	3		11	19	1	9			F	FROM GRP32, ELM02 J01		
	3		11	19	1	10			F	FROM GRP32, ELM02 J01		
	3		11	19	1	13			F	FROM GRP32, ELM02 J01		
	3		11	19	1	14			F	FROM GRP32, ELM02 J01		
	3		11	19	1	21			F	FROM GRP32, ELM02 J01		
	3		11	19	2	5			M	TO GRP21, ELM02 P01		
	3		11	19	2	6			M	TO GRP21, ELM02 P01		
	0		11	19	2	8			M	TO GRP21, ELM02 P01		
	3		11	19	2	9			M	TO GRP21, ELM02 P01		
	0		11	19	2	10			M	TO GRP21, ELM02 P01		
	3		11	19	2	13			M	TO GRP21, ELM02 P01		
	3		11	19	2	14			M	TO GRP21, ELM02 P01		
	0		11	19	2	21			M	TO GRP21, ELM02 P01		
			11	20	1	1				SPOOLING MOTOR DRIVE AMP. LEFT P01		
			11	20	1	2				SPOOLING MOTOR DRIVE AMP. LEFT P01		
			11	20	1	16				SPOOLING MOTOR DRIVE AMP. LEFT P01		
			11	20	2	1				SPOOLING MOTOR DRIVE AMP. RIGHT P02		
			11	20	2	2				SPOOLING MOTOR DRIVE AMP. RIGHT P02		
			11	20	2	16				SPOOLING MOTOR DRIVE AMP. RIGHT P02		
			11	20	3	1				CAPSTAN MOTOR DRIVE AMPLIFIER P03		
			11	20	3	2				CAPSTAN MOTOR DRIVE AMPLIFIER P03		
			11	20	3	9				CAPSTAN MOTOR DRIVE AMPLIFIER P03		
			11	20	3	11				CAPSTAN MOTOR DRIVE AMPLIFIER P03		
			11	20	3	12				CAPSTAN MOTOR DRIVE AMPLIFIER P03		
			11	20	3	16				CAPSTAN MOTOR DRIVE AMPLIFIER P03		
			11	20	4	1				PAR. CONT. INT. SYNCHRONIZER P04		
			11	20	4	2				PAR. CONT. INT. SYNCHRONIZER P04		
			11	20	4	9				PAR. CONT. INT. SYNCHRONIZER P04		
			11	20	4	11				PAR. CONT. INT. SYNCHRONIZER P04		
			11	20	4	16				PAR. CONT. INT. SYNCHRONIZER P04		
			11	20	5	1				SPOOLING MOTOR SUPPLY P05		
			11	20	5	2				SPOOLING MOTOR SUPPLY P05		
			11	20	6	1				EXT. SENSORS P06		
			11	20	6	2				EXT. SENSORS P06		
			11	20	7	1				TAPE LIFT MOTOR, LEFT P07		
			11	20	7	2				TAPE LIFT MOTOR, LEFT P07		

./.

WILLI STUDER AG * S I G N A L W I R E L I S T * 86/12/08 * 10:54 * P A G E 87 *

1.861.022.00 D820X PCM RECORDER * 86/08/27 - 00

SIGNAL NAME	COLOR	MI	ASY	GRP	ELM	PNT	S	LV	TYPE	DESCRIPTION OF ELEMENT	REMARK	ELEMENT NR.
<<— CONT.OF			11	20	8	1				TAPE LIFT MOTOR, RIGHT P08		
+ 0.0			11	20	8	2				TAPE LIFT MOTOR, RIGHT P08		
			11	20	9	1				TACHO SENSOR (SPOOLING M. LEFT) P09		
			11	20	9	2				TACHO SENSOR (SPOOLING M. LEFT) P09		
			11	20	10	1				TACHO SENSOR (SPOOLING M. RIGHT) P10		
			11	20	10	2				TACHO SENSOR (SPOOLING M. RIGHT) P10		
			11	20	11	1				MOVE SENSOR P11		
			11	20	11	2				MOVE SENSOR P11		
			11	20	12	1				TAPE TENSION SENSOR, LEFT P12		
			11	20	12	2				TAPE TENSION SENSOR, LEFT P12		
			11	20	13	1				TAPE TENSION SENSOR, RIGHT P13		
			11	20	13	2				TAPE TENSION SENSOR, RIGHT P13		
			11	20	14	11				FUSE FAILURE DETECTOR P14		
			11	20	14	12				FUSE FAILURE DETECTOR P14		
			11	20	15	1				DISPLAY DRIVER P15		
			11	20	15	2				DISPLAY DRIVER P15		
			11	20	16	1				PARALLEL REMOTE CONTROL P16		
			11	20	16	2				PARALLEL REMOTE CONTROL P16		
			11	20	17	1				TO HEAD BLOCK ASSEMBLY P17		
			11	20	17	2				TO HEAD BLOCK ASSEMBLY P17		
			11	20	17	20				TO HEAD BLOCK ASSEMBLY P17		
			11	20	17	22				TO HEAD BLOCK ASSEMBLY P17		
			11	20	17	25				TO HEAD BLOCK ASSEMBLY P17		
			11	20	17	26				TO HEAD BLOCK ASSEMBLY P17		
			11	20	18	1				VU-METER PANEL, EXTERNAL P18		
			11	20	18	2				VU-METER PANEL, EXTERNAL P18		
			11	20	18	20				VU-METER PANEL, EXTERNAL P18		
			11	20	18	22				VU-METER PANEL, EXTERNAL P18		
			11	20	18	25				VU-METER PANEL, EXTERNAL P18		
			11	20	18	26				VU-METER PANEL, EXTERNAL P18		
			11	20	19	1				SOURCE SELECTOR P19		
			11	20	19	2				SOURCE SELECTOR P19		
			11	20	34	2				INT. SYNCHRONIZER P24		
			11	20	34	4				INT. SYNCHRONIZER P24		
			11	20	34	6				INT. SYNCHRONIZER P24		
			11	20	34	8				INT. SYNCHRONIZER P24		
			11	20	34	10				INT. SYNCHRONIZER P24		
			11	20	34	11				INT. SYNCHRONIZER P24		
			11	20	34	12				INT. SYNCHRONIZER P24		
			11	20	34	13				INT. SYNCHRONIZER P24		
			11	20	34	14				INT. SYNCHRONIZER P24		
			11	20	34	16				INT. SYNCHRONIZER P24		
			11	20	34	18				INT. SYNCHRONIZER P24		
			11	20	34	20				INT. SYNCHRONIZER P24		
			11	20	34	22				INT. SYNCHRONIZER P24		
			11	20	34	24				INT. SYNCHRONIZER P24		
			11	20	34	26				INT. SYNCHRONIZER P24		
			11	20	34	28				INT. SYNCHRONIZER P24		
			11	20	34	30				INT. SYNCHRONIZER P24		
			11	20	34	32				INT. SYNCHRONIZER P24		
			11	20	34	34				INT. SYNCHRONIZER P24		
			11	20	34	36				INT. SYNCHRONIZER P24		
			11	20	34	38				INT. SYNCHRONIZER P24		
			11	20	34	40				INT. SYNCHRONIZER P24		

./.

PUBLISHED: 12/86

* WILLI STUDER AG * S I G N A L W I R E L I S T * 86/12/08 * 10:54 * P A G E 88 *

* 1.861.022.00 D820X PCM RECORDER * 86/08/27 - 00 *

SIGNAL NAME	COLOR	MI	ASY	GRP	ELM	PNT	S	LV	TYPE	DESCRIPTION OF ELEMENT		REMARK	ELEMENT NR.
<<-- CONT.OF			11	20	40	21				SPOOLING MOTOR DRIVER	J01		1.820.759.00
+ 0.0			11	20	41	21				CAPSTAN CONTROL UNIT	J02		1.820.764.00
			11	20	42	17A				CAPSTAN INTERFACE	J03		1.820.727.00
			11	20	42	17B				CAPSTAN INTERFACE	J03		1.820.727.00
			11	20	43	17A				TAPE DECK PERIPHERY CONTR.	J04		1.820.762.00
			11	20	43	17B				TAPE DECK PERIPHERY CONTR.	J04		1.820.762.00
			11	20	44	21				TAPE DECK COUNTER / TIMER	J05		1.820.761.00
			11	20	45	21				SPOOLING MOTOR CONTROLLER	J06		1.820.760.00
			11	20	46	21				MP-UNIT TO CONTROL	J07		1.820.785.00
			11	20	47	21				TAPE DECK SERIAL INTERFACE	J08		1.820.763.00
			11	20	48	17A				MASTER SERIAL INTERFACE	J09		1.820.753.00
			11	20	48	17B				MASTER SERIAL INTERFACE	J09		1.820.753.00
			11	20	49	21				MP-UNIT MASTER	J10		1.820.786.00
			11	20	50	21				SMPTE/EBU INTERFACE	J11		1.820.751.00
	0		11	20	60	1			L	WIRE FIELD (FROM GRP20, ELM70)			
	0		11	20	60	2			L	WIRE FIELD (FROM GRP20, ELM70)			
	0		11	20	60	3			L	WIRE FIELD (FROM GRP20, ELM70)			
	0		11	20	61	3			L	WIRE FIELD (FROM GRP20, ELM70)			
	0		11	20	61	4			L	WIRE FIELD (FROM GRP20, ELM70)			
	0		11	20	61	6			L	WIRE FIELD (FROM GRP20, ELM70)			
	0		11	20	61	7			L	WIRE FIELD (FROM GRP20, ELM70)			
	0		11	20	61	8			L	WIRE FIELD (FROM GRP20, ELM70)			
	0		11	20	70	5			F	FROM GRP21, ELM01	J13		
	0		11	20	70	6			F	FROM GRP21, ELM01	J13		
	0		11	20	70	8			F	FROM GRP21, ELM01	J13		
	0		11	20	70	9			F	FROM GRP21, ELM01	J13		
	0		11	20	70	10			F	FROM GRP21, ELM01	J13		
	0		11	20	70	13			F	FROM GRP21, ELM01	J13		
	0		11	20	70	14			F	FROM GRP21, ELM01	J13		
	0		11	20	70	21			F	FROM GRP21, ELM01	J13		
			11	25	1	5			B	CONN. AUTOLOCATOR, REMOTE TIMER	J01		
			11	25	2	1			B	CONNECTOR SYNCHRONIZER	J02		
			11	25	2	14			B	CONNECTOR SYNCHRONIZER	J02		
			11	25	3	1			B	CONN. PARALLEL REMOTE CONTROL	J03		
			11	26	1	1				FROM GRP27, ELM01	P01		
			11	26	2	9				TO GRP25, ELM01	P02		
			11	27	1	1				TO GRP26, ELM01	P01		
			11	27	2	1				FROM GRP20, ELM16	P02		
			11	27	2	2				FROM GRP20, ELM16	P02		
			11	27	3	1				TO CONNECTOR SYNCHRONIZER	P03		
			11	27	3	2				TO CONNECTOR SYNCHRONIZER	P03		
			11	27	4	1				TO CONN. PARALLEL REMOTE CONTR.	P04		
			11	30	1	7			M	FROM GRP31, ELM01	J01		
			11	30	2	1				FROM GRP20, ELM02	P01		
			11	30	2	2				FROM GRP20, ELM02	P01		
			11	30	2	16				FROM GRP20, ELM02	P01		
			11	31	1	21			M	OUTPUT	P01		
			11	31	1	22			M	OUTPUT	P01		
			11	31	3	1				FROM GRP20, ELM05	P02		
			11	31	3	2				FROM GRP20, ELM05	P02		
			11	32	1	2			F	INPUT FROM GRP12, ELM05	J01		
			11	32	1	3			F	INPUT FROM GRP12, ELM05	J01		
			11	32	1	5			F	INPUT FROM GRP12, ELM05	J01		
			11	32	2	5			M	OUTPUT	P01		

./.

* WILLI STUDER AG * S I G N A L W I R E L I S T * 86/12/08 * 10:54 * P A G E 89 *

* 1.861.022.00 D820X PCM RECORDER * 86/08/27 - 00 *

SIGNAL NAME	COLOR	MI	ASY	GRP	ELM	PNT	S	LV	TYPE	DESCRIPTION OF ELEMENT		REMARK	ELEMENT NR.
<<-- CONT.OF			11	32	2	6			M	OUTPUT	P01		
+ 0.0			11	32	2	8			M	OUTPUT	P01		
			11	32	2	9			M	OUTPUT	P01		
			11	32	2	10			M	OUTPUT	P01		
			11	32	2	13			M	OUTPUT	P01		
			11	32	2	14			M	OUTPUT	P01		
			11	32	2	21			M	OUTPUT	P01		
			11	33	1	7			M	FROM GRP31, ELM01	J01		
			11	33	2	1				FROM GRP20, ELM01	P01		
			11	33	2	2				FROM GRP20, ELM01	P01		
			11	33	2	16				FROM GRP20, ELM01	P01		
			11	36	1	1				TACHO SENSOR	P01		1.820.771.00
			11	36	1	2				TACHO SENSOR	P01		1.820.771.00
			11	37	1	1				TACHO SENSOR	P01		1.820.771.00
			11	37	1	2				TACHO SENSOR	P01		1.820.771.00
			11	38	1	12			F	FROM GRP39, ELM02	J01		
			11	39	1	1				FROM GRP20, ELM03	P01		
			11	39	1	2				FROM GRP20, ELM03	P01		
			11	39	1	9				FROM GRP20, ELM03	P01		
			11	39	1	16				FROM GRP20, ELM03	P01		
			11	39	2	12			M	TO GRP38, ELM01	P02		
			11	42	1	1				FROM GRP20, ELM12	P01		
			11	42	1	2				FROM GRP20, ELM12	P01		
			11	43	1	1				FROM GRP20, ELM13	P01		
			11	43	1	2				FROM GRP20, ELM13	P01		
			11	44	1	1				FROM GRP20, ELM06	P01		
			11	44	1	2				FROM GRP20, ELM06	P01		
			11	45	1	1				FROM GRP20, ELM11	P01		
			11	45	1	2				FROM GRP20, ELM11	P01		
			11	46	1	1				FROM GRP20, ELM07	P01		
			11	46	1	2				FROM GRP20, ELM07	P01		
			11	47	1	1				FROM GRP20, ELM08	P01		
			11	47	1	2				FROM GRP20, ELM08	P01		
			11	48	1	1				FROM GRP50, ELM03			
			11	48	1	2				FROM GRP50, ELM03			
			11	48	2	1				CONNECTOR EDIT ASSEMBLY			
			11	48	2	2				CONNECTOR EDIT ASSEMBLY			
			11	49	1	1				FROM GRP48, ELM02			
			11	49	1	2				FROM GRP48, ELM02			
			11	49	2	5				WIRE FIELD			
			11	50	1	1				FROM GRP20, ELM15	P01		
			11	50	1	2				FROM GRP20, ELM15	P01		
			11	50	2	1				CONNECTOR COMMAND UNIT	P03		
			11	50	2	2				CONNECTOR COMMAND UNIT	P03		
			11	50	3	1				CONNECTOR PUSHBUTTON ASSEMBLY	P02		
			11	50	3	2				CONNECTOR PUSHBUTTON ASSEMBLY	P02		
			11	50	4	1				CONNECTOR LCD DISPLAY UNIT	P04		
			11	51	1	1				FROM GRP50,ELM02			
			11	51	1	2				FROM GRP50,ELM02			
			11	52	1	1				FROM GRP50, ELM04			
			11	59	1	11				FROM GRP20, ELM14	P01		
			11	59	1	12				FROM GRP20, ELM14	P01		

PUBLISHED: 12/86

SIGNAL NAME	COLOR	MI	ASY	GRP	ELM	PNT	S	LV	TYPE	DESCRIPTION OF ELEMENT		REMARK	ELEMENT NR.
* 5.0			11	26	1	2				FROM GRP27. ELM01	P01		
			11	27	1	2				TO GRP26. ELM01	P01		
			11	48	2	3				CONNECTOR EDIT ASSEMBLY			
			11	49	1	3				FROM GRP48. ELM02			
			11	49	2	1				WIRE FIELD			
			11	50	4	2				CONNECTOR LCD DISPLAY UNIT	P04		
			11	52	1	2				FROM GRP50. ELM04			
* 5.6	3		11	19	1	1			F	FROM GRP32. ELM02	J01		
	3		11	19	1	2			F	FROM GRP32. ELM02	J01		
	3		11	19	2	1			M	TO GRP21. ELM02	P01		
	3		11	19	2	2			M	TO GRP21. ELM02	P01		
			11	20	1	3				SPOOLING MOTOR DRIVE AMP. LEFT	P01		
			11	20	1	4				SPOOLING MOTOR DRIVE AMP. LEFT	P01		
			11	20	2	3				SPOOLING MOTOR DRIVE AMP. RIGHT	P02		
			11	20	2	4				SPOOLING MOTOR DRIVE AMP. RIGHT	P02		
			11	20	3	3				CAPSTAN MOTOR DRIVE AMPLIFIER	P03		
			11	20	3	4				CAPSTAN MOTOR DRIVE AMPLIFIER	P03		
			11	20	4	3				PAR. CONT. INT. SYNCHRONIZER	P04		
			11	20	4	4				PAR. CONT. INT. SYNCHRONIZER	P04		
			11	20	5	3				SPOOLING MOTOR SUPPLY	P05		
			11	20	5	4				SPOOLING MOTOR SUPPLY	P05		
			11	20	6	3				EXT. SENSORS	P06		
			11	20	6	4				EXT. SENSORS	P06		
			11	20	7	3				TAPE LIFT MOTOR. LEFT	P07		
			11	20	7	4				TAPE LIFT MOTOR. LEFT	P07		
			11	20	8	3				TAPE LIFT MOTOR. RIGHT	P08		
			11	20	8	4				TAPE LIFT MOTOR. RIGHT	P08		
			11	20	9	3				TACHO SENSOR (SPOOLING M. LEFT)	P09		
			11	20	9	4				TACHO SENSOR (SPOOLING M. LEFT)	P09		
			11	20	10	3				TACHO SENSOR (SPOOLING M. RIGHT)	P10		
			11	20	10	4				TACHO SENSOR (SPOOLING M. RIGHT)	P10		
			11	20	11	3				MOVE SENSOR	P11		
			11	20	11	4				MOVE SENSOR	P11		
			11	20	12	3				TAPE TENSION SENSOR. LEFT	P12		
			11	20	12	4				TAPE TENSION SENSOR. LEFT	P12		
			11	20	13	3				TAPE TENSION SENSOR. RIGHT	P13		
			11	20	13	4				TAPE TENSION SENSOR. RIGHT	P13		
			11	20	14	9				FUSE FAILURE DETECTOR	P14		
			11	20	14	10				FUSE FAILURE DETECTOR	P14		
			11	20	15	3				DISPLAY DRIVER	P15		
			11	20	15	4				DISPLAY DRIVER	P15		
			11	20	16	3				PARALLEL REMOTE CONTROL	P16		
			11	20	16	4				PARALLEL REMOTE CONTROL	P16		
			11	20	17	3				TO HEAD BLOCK ASSEMBLY	P17		
			11	20	17	4				TO HEAD BLOCK ASSEMBLY	P17		
			11	20	18	3				VU-METER PANEL. EXTERNAL	P18		
			11	20	18	4				VU-METER PANEL. EXTERNAL	P18		
			11	20	19	3				SOURCE SELECTOR	P19		
			11	20	19	4				SOURCE SELECTOR	P19		
			11	20	40	20				SPOOLING MOTOR DRIVER	J01		1.820.759.00
			11	20	41	20				CAPSTAN CONTROL UNIT	J02		1.820.764.00
			11	20	42	16A				CAPSTAN INTERFACE	J03		1.820.727.00
			11	20	42	16B				CAPSTAN INTERFACE	J03		1.820.727.00
			11	20	43	16A				TAPE DECK PERIPHERY CONTR.	J04		1.820.762.00

a/a

SIGNAL NAME	COLOR	MI	ASY	GRP	ELM	PNT	S	LV	TYPE	DESCRIPTION OF ELEMENT		REMARK	ELEMENT NR.
<<— CONT.OF			11	20	43	16B				TAPE DECK PERIPHERY CONTR.	J04		1.820.762.00
* 5.6			11	20	44	20				TAPE DECK COUNTER / TIMER	J05		1.820.761.00
			11	20	45	20				SPOOLING MOTOR CONTROLLER	J06		1.820.760.00
			11	20	46	20				MP-UNIT TO CONTROL	J07		1.820.785.00
			11	20	47	20				TAPE DECK SERIAL INTERFACE	J08		1.820.763.00
			11	20	48	16A				MASTER SERIAL INTERFACE	J09		1.820.753.00
			11	20	48	16B				MASTER SERIAL INTERFACE	J09		1.820.753.00
			11	20	49	20				MP-UNIT MASTER	J10		1.820.786.00
			11	20	50	20				SMPTE/EBU INTERFACE	J11		1.820.751.00
	3		11	20	62	1			L	WIRE FIELD			
	3		11	20	62	2			L	WIRE FIELD			
	3		11	20	70	1			F	FROM GRP21. ELM01	J13		
	3		11	20	70	2			F	FROM GRP21. ELM01	J13		
			11	27	2	3				FROM GRP20. ELM16	P02		
			11	27	2	4				FROM GRP20. ELM16	P02		
			11	30	2	3				FROM GRP20. ELM02	P01		
			11	30	2	4				FROM GRP20. ELM02	P01		
			11	31	3	3				FROM GRP20. ELM05	P02		
			11	31	3	4				FROM GRP20. ELM05	P02		
			11	32	2	1			M	OUTPUT	P01		
			11	32	2	2			M	OUTPUT	P01		
			11	33	2	3				FROM GRP20. ELM01	P01		
			11	33	2	4				FROM GRP20. ELM01	P01		
			11	36	1	3				TACHO SENSOR	P01		1.820.771.00
			11	36	1	4				TACHO SENSOR	P01		1.820.771.00
			11	37	1	3				TACHO SENSOR	P01		1.820.771.00
			11	37	1	4				TACHO SENSOR	P01		1.820.771.00
			11	39	1	3				FROM GRP20. ELM03	P01		
			11	39	1	4				FROM GRP20. ELM03	P01		
			11	42	1	3				FROM GRP20. ELM12	P01		
			11	42	1	4				FROM GRP20. ELM12	P01		
			11	43	1	3				FROM GRP20. ELM13	P01		
			11	43	1	4				FROM GRP20. ELM13	P01		
			11	44	1	3				FROM GRP20. ELM06	P01		
			11	44	1	4				FROM GRP20. ELM06	P01		
			11	45	1	3				FROM GRP20. ELM11	P01		
			11	45	1	4				FROM GRP20. ELM11	P01		
			11	46	1	3				FROM GRP20. ELM07	P01		
			11	46	1	4				FROM GRP20. ELM07	P01		
			11	47	1	3				FROM GRP20. ELM08	P01		
			11	47	1	4				FROM GRP20. ELM08	P01		
			11	48	1	3				FROM GRP50. ELM03			
			11	48	1	4				FROM GRP50. ELM03			
			11	50	1	3				FROM GRP20. ELM15	P01		
			11	50	1	4				FROM GRP20. ELM15	P01		
			11	50	2	3				CONNECTOR COMMAND UNIT	P03		
			11	50	2	4				CONNECTOR COMMAND UNIT	P03		
			11	50	3	3				CONNECTOR PUSHBUTTON ASSEMBLY	P02		
			11	50	3	4				CONNECTOR PUSHBUTTON ASSEMBLY	P02		
			11	51	1	3				FROM GRP50.ELM02			
			11	51	1	4				FROM GRP50.ELM02			
			11	59	1	9				FROM GRP20. ELM14	P01		
			11	59	1	10				FROM GRP20. ELM14	P01		

PUBLISHED: 12/86

* WILLI STUDER AG * S I G N A L W I R E L I S T * 86/12/08 * 10:54 * P A G E 92 *

* 1.861.022.00 D820X PCM RECORDER * 86/08/27 - 00 *

SIGNAL NAME	COLOR	MI	ASY	GRP	ELM	PNT	S	LV	TYPE	DESCRIPTION OF ELEMENT		REMARK	ELEMENT NR.
+ 5V			11	38	1	9			F	FROM GRP39. ELM02	J01		
			11	39	2	9			M	TO GRP38. ELM01	P02		
+CAPMOT	2		1	79	1	24				POWER CONNECTOR (24 PIN MOLEX FEM)			
	2		1	79	2	24				POWER CONNECTOR (24 PIN MOLEX MALE)			
	2		11	11	3	3			L	RECTIFIER	DZ03		70.01.0231
	2		11	12	4	1			L	CAPACITOR	C04		59.26.7103
	2		11	12	5	7			M	CONNECTOR TO GRP32. ELM01	P01		
	2		11	19	1	24			F	FROM GRP32. ELM02	J01		
	2		11	19	2	24			M	TO GRP21. ELM02	P01		
			11	20	14	1				FUSE FAILURE DETECTOR	P14		
			11	20	14	2				FUSE FAILURE DETECTOR	P14		
	2		11	20	62	6			L	WIRE FIELD			
	2		11	20	62	7			L	WIRE FIELD			
	2		11	20	70	24			F	FROM GRP21. ELM01	J13		
	2		11	20	71	6			F	TO CAPSTAN MOTOR DRIVE AMP.			
			11	32	1	7			F	INPUT FROM GRP12. ELM05	J01		
			11	32	2	24			M	OUTPUT	P01		
			11	39	3	6			M	FROM GRP20. ELM71	P03		
			11	59	1	1				FROM GRP20. ELM14	P01		
			11	59	1	2				FROM GRP20. ELM14	P01		
+PSVTMOT	2		11	18	1	1			F	FROM GRP31. ELM01	J01		
	2		11	18	1	2			F	FROM GRP31. ELM01	J01		
	2		11	18	1	3			F	FROM GRP31. ELM01	J01		
	2		11	18	1	4			F	FROM GRP31. ELM01	J01		
	2		11	18	1	5			F	FROM GRP31. ELM01	J01		
	2		11	18	1	6			F	FROM GRP31. ELM01	J01		
	2		11	18	1	7			F	FROM GRP31. ELM01	J01		
	2		11	18	1	8			F	FROM GRP31. ELM01	J01		
	2		11	18	2	3			F	TO GRP33. ELM01	P01		
	2		11	18	2	6			F	TO GRP33. ELM01	P01		
	2		11	18	2	9			F	TO GRP33. ELM01	P01		
	2		11	18	2	12			F	TO GRP33. ELM01	P01		
	2		11	18	3	3			F	TO GRP30. ELM01	P02		
	2		11	18	3	6			F	TO GRP30. ELM01	P02		
	2		11	18	3	9			F	TO GRP30. ELM01	P02		
	2		11	18	3	12			F	TO GRP30. ELM01	P02		
			11	30	1	3			M	FROM GRP31. ELM01	J01		
			11	30	1	6			M	FROM GRP31. ELM01	J01		
			11	30	1	9			M	FROM GRP31. ELM01	J01		
			11	30	1	12			M	FROM GRP31. ELM01	J01		
			11	31	1	1			M	OUTPUT	P01		
			11	31	1	2			M	OUTPUT	P01		
			11	31	1	3			M	OUTPUT	P01		
			11	31	1	4			M	OUTPUT	P01		
			11	31	1	5			M	OUTPUT	P01		
			11	31	1	6			M	OUTPUT	P01		
			11	31	1	7			M	OUTPUT	P01		
			11	31	1	8			M	OUTPUT	P01		
			11	31	4	1			F	CONNECTOR TO CAPACITOR (GRP34)	P03		
			11	31	4	2			F	CONNECTOR TO CAPACITOR (GRP34)	P03		
			11	31	4	3			F	CONNECTOR TO CAPACITOR (GRP34)	P03		
			11	33	1	3			M	FROM GRP31. ELM01	J01		
			11	33	1	6			M	FROM GRP31. ELM01	J01		

./.

* WILLI STUDER AG * S I G N A L W I R E L I S T * 86/12/08 * 10:54 * P A G E 93 *

* 1.861.022.00 D820X PCM RECORDER * 86/08/27 - 00 *

SIGNAL NAME	COLOR	MI	ASY	GRP	ELM	PNT	S	LV	TYPE	DESCRIPTION OF ELEMENT		REMARK	ELEMENT NR.
<<— CONT.OF			11	33	1	9			M	FROM GRP31. ELM01	J01		
+PSVTMOT			11	33	1	12			M	FROM GRP31. ELM01	J01		
	2		11	34	1	1A			L	CAPACITOR			
	2		11	34	1	1B			L	CAPACITOR			
	2		11	34	1	1C			L	CAPACITOR			
	2		11	34	2	1			M	CONNECTOR (FROM GRP31)	J01		
	2		11	34	2	2			M	CONNECTOR (FROM GRP31)	J01		
	2		11	34	2	3			M	CONNECTOR (FROM GRP31)	J01		
+REMSUP	8		1	79	1	16				POWER CONNECTOR (24 PIN MOLEX FEM)			
	8		1	79	2	16				POWER CONNECTOR (24 PIN MOLEX MALE)			
	8		11	19	1	16			F	FROM GRP32. ELM02	J01		
	8		11	19	2	16			M	TO GRP21. ELM02	P01		
			11	20	16	5				PARALLEL REMOTE CONTROL	P16		
			11	20	16	6				PARALLEL REMOTE CONTROL	P16		
	8		11	20	62	10			U	WIRE FIELD			
	8		11	20	70	16			F	FROM GRP21. ELM01	J13		
			11	25	1	9			B	CONN. AUTOLOCATOR. REMOTE TIMER	J01		
			11	26	1	3				FROM GRP27. ELM01	P01		
			11	26	2	8				TO GRP25. ELM01	P02		
			11	27	1	3				TO GRP26. ELM01	P01		
			11	27	2	5				FROM GRP20. ELM16	P02		
			11	27	2	6				FROM GRP20. ELM16	P02		
			11	32	2	16			M	OUTPUT	P01		
+STABIN	3		1	79	1	17				POWER CONNECTOR (24 PIN MOLEX FEM)			
	3		1	79	2	17				POWER CONNECTOR (24 PIN MOLEX MALE)			
	2		11	11	1	3			L	RECTIFIER	DZ01		70.01.0231
	2		11	12	1	1			L	CAPACITOR	C01		59.26.7103
	2		11	12	2	1			L	CAPACITOR	C02		59.26.7103
	2		11	12	5	1			M	CONNECTOR TO GRP32. ELM01	P01		
	2		11	12	5	4			M	CONNECTOR TO GRP32. ELM01	P01		
			11	32	1	1			F	INPUT FROM GRP12. ELM05	J01		
			11	32	1	4			F	INPUT FROM GRP12. ELM05	J01		
+STABSNS	3		11	19	1	17			F	FROM GRP32. ELM02	J01		
	3		11	19	2	17			M	TO GRP21. ELM02	P01		
			11	20	14	7				FUSE FAILURE DETECTOR	P14		
			11	20	14	8				FUSE FAILURE DETECTOR	P14		
	3		11	20	62	4			U	WIRE FIELD			
	3		11	20	70	17			F	FROM GRP21. ELM01	J13		
			11	32	2	17			M	OUTPUT	P01		
			11	59	1	7				FROM GRP20. ELM14	P01		
			11	59	1	8				FROM GRP20. ELM14	P01		
+VMOTLFT			11	33	3	1			J		P02		
	2		11	36	2	1				FROM GRP33. ELM 03			
+VMOTRHT			11	30	3	1			J		P02		
	2		11	37	2	1				FROM GRP30. ELM C3			
+YSUP			11	20	5	9				SPOOLING MOTOR SUPPLY	P05		
			11	20	43	12A				TAPE DECK PERIPHERY CONTR.	J04		1.820.762.00
			11	31	3	9				FROM GRP20. ELM05	P02		

PUBLISHED: 12/86

* WILLI STUDER AG * S I G N A L W I R E L I S T * 86/12/08 * 10:54 * P A G E 94 *

* 1.861.022.00 D820X PCM RECORDER * 86/08/27 - 00 *

SIGNAL NAME	COLOR	MI	ASY	GRP	ELM	PNT	S	LV	TYPE	DESCRIPTION OF ELEMENT	REMARK	ELEMENT NR.
+0.0			1	70	1	23				SIGNAL QUALITY (26-PIN FLATCABLE)		1.861.731.00
			1	70	1	24				SIGNAL QUALITY (26-PIN FLATCABLE)		1.861.731.00
			1	70	1	25				SIGNAL QUALITY (26-PIN FLATCABLE)		1.861.731.00
			1	70	1	26				SIGNAL QUALITY (26-PIN FLATCABLE)		1.861.731.00
			1	74	1	5				RACK-CCP/DP (25-PIN D-SUB)		1.861.000.00
			1	74	1	6				RACK-CCP/DP (25-PIN D-SUB)		1.861.000.00
			1	74	1	7				RACK-CCP/DP (25-PIN D-SUB)		1.861.000.00
			1	74	1	8				RACK-CCP/DP (25-PIN D-SUB)		1.861.000.00
			1	74	1	9				RACK-CCP/DP (25-PIN D-SUB)		1.861.000.00
			1	74	1	10				RACK-CCP/DP (25-PIN D-SUB)		1.861.000.00
			1	74	1	11				RACK-CCP/DP (25-PIN D-SUB)		1.861.000.00
			1	74	1	12				RACK-CCP/DP (25-PIN D-SUB)		1.861.000.00
			1	74	1	13				RACK-CCP/DP (25-PIN D-SUB)		1.861.000.00
			1	79	1	5				POWER CONNECTOR (24 PIN MOLEX FEM)		
			1	79	1	6				POWER CONNECTOR (24 PIN MOLEX FEM)		
			1	79	1	8				POWER CONNECTOR (24 PIN MOLEX FEM)		
			1	79	1	9				POWER CONNECTOR (24 PIN MOLEX FEM)		
			1	79	1	10				POWER CONNECTOR (24 PIN MOLEX FEM)		
			1	79	1	13				POWER CONNECTOR (24 PIN MOLEX FEM)		
			1	79	1	14				POWER CONNECTOR (24 PIN MOLEX FEM)		
			1	79	1	21				POWER CONNECTOR (24 PIN MOLEX FEM)		
			1	79	1	22				POWER CONNECTOR (24 PIN MOLEX FEM)		
			1	79	2	5				POWER CONNECTOR (24 PIN MOLEX MALE)		
			1	79	2	6				POWER CONNECTOR (24 PIN MOLEX MALE)		
			1	79	2	8				POWER CONNECTOR (24 PIN MOLEX MALE)		
			1	79	2	9				POWER CONNECTOR (24 PIN MOLEX MALE)		
			1	79	2	10				POWER CONNECTOR (24 PIN MOLEX MALE)		
			1	79	2	13				POWER CONNECTOR (24 PIN MOLEX MALE)		
			1	79	2	14				POWER CONNECTOR (24 PIN MOLEX MALE)		
			1	79	2	21				POWER CONNECTOR (24 PIN MOLEX MALE)		
			1	79	2	22				POWER CONNECTOR (24 PIN MOLEX MALE)		
			1	79	3	7				CAGE PWR CONNECTOR (25 PIN D-SUB)		
			1	79	3	8				CAGE PWR CONNECTOR (25 PIN D-SUB)		
			1	79	3	9				CAGE PWR CONNECTOR (25 PIN D-SUB)		
			1	79	3	20				CAGE PWR CONNECTOR (25 PIN D-SUB)		
			1	79	3	21				CAGE PWR CONNECTOR (25 PIN D-SUB)		
			1	79	4	6				POWER CONNECTOR RACK (25 PIN D-SUB)		
			1	79	4	7				POWER CONNECTOR RACK (25 PIN D-SUB)		
			1	79	4	18				POWER CONNECTOR RACK (25 PIN D-SUB)		
			1	79	4	19				POWER CONNECTOR RACK (25 PIN D-SUB)		
			1	80	1	1A				CUE/PC DELAY		1.861.816.00
			1	80	1	1B				CUE/PC DELAY		1.861.816.00
			1	80	1	1C				CUE/PC DELAY		1.861.816.00
			1	80	1	15A				CUE/PC DELAY		1.861.816.00
			1	80	1	15B				CUE/PC DELAY		1.861.816.00
			1	80	1	15C				CUE/PC DELAY		1.861.816.00
			1	80	2	1A				PDM MODULATOR		1.861.811.00
			1	80	2	1B				PDM MODULATOR		1.861.811.00
			1	80	2	1C				PDM MODULATOR		1.861.811.00
			1	80	2	15A				PDM MODULATOR		1.861.811.00
			1	80	2	15B				PDM MODULATOR		1.861.811.00
			1	80	2	15C				PDM MODULATOR		1.861.811.00
			1	80	3	1A				PDM DEMODULATOR 1		1.861.812.00
			1	80	3	1B				PDM DEMODULATOR 1		1.861.812.00
			1	80	3	1C				PDM DEMODULATOR 1		1.861.812.00

./.

* WILLI STUDER AG * S I G N A L W I R E L I S T * 86/12/08 * 10:54 * P A G E 95 *

* 1.861.022.00 D820X PCM RECORDER * 86/08/27 - 00 *

SIGNAL NAME	COLOR	MI	ASY	GRP	ELM	PNT	S	LV	TYPE	DESCRIPTION OF ELEMENT	REMARK	ELEMENT NR.
<<— CONT.OF			1	80	3	15A				PDM DEMODULATOR 1		1.861.812.00
+0.0			1	80	3	15B				PDM DEMODULATOR 1		1.861.812.00
			1	80	3	15C				PDM DEMODULATOR 1		1.861.812.00
			1	80	4	1A				PDM DEMODULATOR 2		1.861.812.00
			1	80	4	1B				PDM DEMODULATOR 2		1.861.812.00
			1	80	4	1C				PDM DEMODULATOR 2		1.861.812.00
			1	80	4	15A				PDM DEMODULATOR 2		1.861.812.00
			1	80	4	15B				PDM DEMODULATOR 2		1.861.812.00
			1	80	4	15C				PDM DEMODULATOR 2		1.861.812.00
			1	80	5	1A				SPARE 1		1.861.815.00
			1	80	5	1B				SPARE 1		1.861.815.00
			1	80	5	1C				SPARE 1		1.861.815.00
			1	80	5	15A				SPARE 1		1.861.815.00
			1	80	5	15B				SPARE 1		1.861.815.00
			1	80	5	15C				SPARE 1		1.861.815.00
			1	80	6	1A				ANALOG ROUTING		1.861.814.00
			1	80	6	1B				ANALOG ROUTING		1.861.814.00
			1	80	6	1C				ANALOG ROUTING		1.861.814.00
			1	80	6	4C				ANALOG ROUTING		1.861.814.00
			1	80	6	15A				ANALOG ROUTING		1.861.814.00
			1	80	6	15B				ANALOG ROUTING		1.861.814.00
			1	80	6	15C				ANALOG ROUTING		1.861.814.00
			1	80	7	1A				PDM CONTROL		1.861.813.00
			1	80	7	1B				PDM CONTROL		1.861.813.00
			1	80	7	1C				PDM CONTROL		1.861.813.00
			1	80	7	15A				PDM CONTROL		1.861.813.00
			1	80	7	15B				PDM CONTROL		1.861.813.00
			1	80	7	15C				PDM CONTROL		1.861.813.00
			1	80	8	1A				DISPLAY INTERFACE		1.861.817.00
			1	80	8	1B				DISPLAY INTERFACE		1.861.817.00
			1	80	8	1C				DISPLAY INTERFACE		1.861.817.00
			1	80	8	15A				DISPLAY INTERFACE		1.861.817.00
			1	80	8	15B				DISPLAY INTERFACE		1.861.817.00
			1	80	8	15C				DISPLAY INTERFACE		1.861.817.00
			1	80	9	1A				SPARE 2		
			1	80	9	1B				SPARE 2		
			1	80	9	1C				SPARE 2		
			1	80	9	15A				SPARE 2		
			1	80	9	15B				SPARE 2		
			1	80	9	15C				SPARE 2		
			1	80	13	6				RACK PWR CONNECTOR (25 PIN D-SUB)		
			1	80	13	7				RACK PWR CONNECTOR (25 PIN D-SUB)		
			1	80	13	18				RACK PWR CONNECTOR (25 PIN D-SUB)		
			1	80	13	19				RACK PWR CONNECTOR (25 PIN D-SUB)		
			1	80	17	12				SIGNAL QUALITY DISPL.(25 PIN D-SUB)		
			1	80	17	13				SIGNAL QUALITY DISPL.(25 PIN D-SUB)		
			1	80	17	25				SIGNAL QUALITY DISPL.(25 PIN D-SUB)		
			1	80	18	6				DISPLAY PANEL/CCP (25 PIN D-SUB)		
			1	80	18	7				DISPLAY PANEL/CCP (25 PIN D-SUB)		
			1	80	18	8				DISPLAY PANEL/CCP (25 PIN D-SUB)		
			1	80	18	9				DISPLAY PANEL/CCP (25 PIN D-SUB)		
			1	80	18	10				DISPLAY PANEL/CCP (25 PIN D-SUB)		
			1	80	18	11				DISPLAY PANEL/CCP (25 PIN D-SUB)		
			1	80	18	12				DISPLAY PANEL/CCP (25 PIN D-SUB)		

./.

PUBLISHED: 12/86

```
*    WILLI STUDER AG    *    S I G N A L    W I R E    L I S T              * 86/12/08 *  10:54 *  P A G E  96  *
*              1.861.022.00  D820X PCM RECORDER                              * 86/08/27 - 00                      *
```

SIGNAL NAME	COLOR	MI	ASY	GRP	ELM	PNT	S	LV	TYPE	DESCRIPTION OF ELEMENT	REMARK	ELEMENT NR.
<<-- CONT.OF			1	80	18	13				DISPLAY PANEL/CCP (25 PIN D-SUB)		
+0.0			1	80	19	5				RACK-MONITOR PANEL (D-SUB CRIMP)		
			1	80	19	6				RACK-MONITOR PANEL (D-SUB CRIMP)		
			1	80	19	17				RACK-MONITOR PANEL (C-SUB CRIMP)		
			1	80	19	18				RACK-MONITOR PANEL (C-SUB CRIMP)		
			1	80	21	1				RACK-TAPE DECK (SERVO)(26 PIN FLAT)		
			1	80	21	3				RACK-TAPE DECK (SERVO)(26 PIN FLAT)		
			1	80	21	5				RACK-TAPE DECK (SERVO)(26 PIN FLAT)		
			1	80	21	7				RACK-TAPE DECK (SERVO)(26 PIN FLAT)		
			1	80	21	9				RACK-TAPE DECK (SERVO)(26 PIN FLAT)		
			1	80	21	11				RACK-TAPE DECK (SERVO)(26 PIN FLAT)		
			1	80	21	13				RACK-TAPE DECK (SERVO)(26 PIN FLAT)		
			1	80	21	15				RACK-TAPE DECK (SERVO)(26 PIN FLAT)		
			1	80	21	17				RACK-TAPE DECK (SERVO)(26 PIN FLAT)		
			1	80	21	19				RACK-TAPE DECK (SERVO)(26 PIN FLAT)		
			1	80	21	21				RACK-TAPE DECK (SERVO)(26 PIN FLAT)		
			1	80	21	23				RACK-TAPE DECK (SERVO)(26 PIN FLAT)		
			1	80	21	25				RACK-TAPE DECK (SERVO)(26 PIN FLAT)		
			1	80	22	1				RACK-TAPE DECK (SSDA) (26 PIN FLAT)		
			1	80	22	3				RACK-TAPE DECK (SSDA) (26 PIN FLAT)		
			1	80	22	5				RACK-TAPE DECK (SSDA) (26 PIN FLAT)		
			1	80	22	7				RACK-TAPE DECK (SSDA) (26 PIN FLAT)		
			1	80	22	9				RACK-TAPE DECK (SSDA) (26 PIN FLAT)		
			1	80	22	11				RACK-TAPE DECK (SSDA) (26 PIN FLAT)		
			1	80	22	13				RACK-TAPE DECK (SSDA) (26 PIN FLAT)		
			1	80	22	15				RACK-TAPE DECK (SSDA) (26 PIN FLAT)		
			1	80	22	17				RACK-TAPE DECK (SSDA) (26 PIN FLAT)		
			1	80	22	19				RACK-TAPE DECK (SSDA) (26 PIN FLAT)		
			1	80	22	21				RACK-TAPE DECK (SSDA) (26 PIN FLAT)		
			1	80	22	23				RACK-TAPE DECK (SSDA) (26 PIN FLAT)		
			1	80	22	25				RACK-TAPE DECK (SSDA) (26 PIN FLAT)		
			2	1	2	7				POWER DELTA MOLEX (P2) (D-SUB 25P)		1.861.895.00
			2	1	2	8				POWER DELTA MOLEX (P2) (D-SUB 25P)		1.861.895.00
			2	1	2	9				POWER DELTA MOLEX (P2) (D-SUB 25P)		1.861.895.00
			2	1	2	20				POWER DELTA MOLEX (P2) (D-SUB 25P)		1.861.895.00
			2	1	2	21				POWER DELTA MOLEX (P2) (D-SUB 25P)		1.861.895.00
			2	1	4	15A				DETECTOR		1.861.804.00
			2	1	4	15B				DETECTOR		1.861.804.00
			2	1	4	15C				DETECTOR		1.861.804.00
			2	1	5	15A				WRITE AMPLIFIER		1.861.803.00
			2	1	5	15B				WRITE AMPLIFIER		1.861.803.00
			2	1	5	15C				WRITE AMPLIFIER		1.861.803.00
			2	1	6	15A				TAPE DECK MONITOR		1.861.802.00
			2	1	6	15B				TAPE DECK MONITOR		1.861.802.00
			2	1	6	15C				TAPE DECK MONITOR		1.861.802.00
			2	1	7	15A				PLAYBACK AMPLIFIER		1.861.801.00
			2	1	7	15B				PLAYBACK AMPLIFIER		1.861.801.00
			2	1	7	15C				PLAYBACK AMPLIFIER		1.861.801.00
			2	3	1	18				HEADBLOCK READ (P4) (D-SUB 25P)		1.861.801.00
			2	3	1	19				HEADBLOCK READ (P4) (D-SUB 25P)		1.861.801.00
			2	3	1	20				HEADBLOCK READ (P4) (D-SUB 25P)		1.861.801.00
			2	3	1	21				HEADBLOCK READ (P4) (D-SUB 25P)		1.861.801.00
			2	4	2	1				INTERNAL PHONE CONNECTOR J2 (CIS)		1.861.802.00
			2	4	2	6				INTERNAL PHONE CONNECTOR J2 (CIS)		1.861.802.00
												./.

```
*    WILLI STUDER AG    *    S I G N A L    W I R E    L I S T              * 86/12/08 *  10:54 *  P A G E  97  *
*              1.861.022.00  D820X PCM RECORDER                              * 86/08/27 - 00                      *
```

SIGNAL NAME	COLOR	MI	ASY	GRP	ELM	PNT	S	LV	TYPE	DESCRIPTION OF ELEMENT	REMARK	ELEMENT NR.
<<-- CONT.OF			2	6	1	3				INTERNAL PHONE PLUG (SOLD.)		54.240.102.00
+0.0			3	1	1	5				CBUS CCP TRANSCEIVER (D-SUB 25P F)	0	1.861.742.00
			3	1	1	6				CBUS CCP TRANSCEIVER (D-SUB 25P F)	0	1.861.742.00
			3	1	1	7				CBUS CCP TRANSCEIVER (D-SUB 25P F)	0	1.861.742.00
			3	1	1	8				CBUS CCP TRANSCEIVER (D-SUB 25P F)	0	1.861.742.00
			3	1	1	9				CBUS CCP TRANSCEIVER (D-SUB 25P F)	0	1.861.742.00
			3	1	1	10				CBUS CCP TRANSCEIVER (D-SUB 25P F)	0	1.861.742.00
			3	1	1	11				CBUS CCP TRANSCEIVER (D-SUB 25P F)	0	1.861.742.00
			3	1	1	12				CBUS CCP TRANSCEIVER (D-SUB 25P F)	0	1.861.742.00
			3	1	1	13				CBUS CCP TRANSCEIVER (D-SUB 25P F)	0	1.861.742.00
			3	1	2	14				DATA DP KEYBOARD (FLATCABLE 26P)		1.861.742.00
			3	1	2	16				DATA DP KEYBOARD (FLATCABLE 26P)		1.861.742.00
			3	1	2	18				DATA DP KEYBOARD (FLATCABLE 26P)		1.861.742.00
			3	1	2	20				DATA DP KEYBOARD (FLATCABLE 26P)		1.861.742.00
			3	1	2	22				DATA DP KEYBOARD (FLATCABLE 26P)		1.861.742.00
			3	1	2	24				DATA DP KEYBOARD (FLATCABLE 26P)		1.861.742.00
			3	1	2	26				DATA DP KEYBOARD (FLATCABLE 26P)		1.861.742.00
			3	2	1	5				BUS REARPANEL TO (D-SUB 25P M)		1.861.744.00
			3	2	1	6				BUS REARPANEL TO (D-SUB 25P M)		1.861.744.00
			3	2	1	7				BUS REARPANEL TO (D-SUB 25P M)		1.861.744.00
			3	2	1	8				BUS REARPANEL TO (D-SUB 25P M)		1.861.744.00
			3	2	1	9				BUS REARPANEL TO (D-SUB 25P M)		1.861.744.00
			3	2	1	10				BUS REARPANEL TO (C-SUB 25P M)		1.861.744.00
			3	2	1	11				BUS REARPANEL TO (D-SUB 25P M)		1.861.744.00
			3	2	1	12				BUS REARPANEL TO (D-SUB 25P M)		1.861.744.00
			3	2	1	13				BUS REARPANEL TO (C-SUB 25P M)		1.861.744.00
			3	2	2	5				CBUS DP PROCESSOR (D-SUB 25P F)		1.861.744.00
			3	2	2	6				CBUS DP PROCESSOR (C-SUB 25P F)		1.861.744.00
			3	2	2	7				CBUS DP PROCESSOR (D-SUB 25P F)		1.861.744.00
			3	2	2	8				CBUS DP PROCESSOR (C-SUB 25P F)		1.861.744.00
			3	2	2	9				CBUS DP PROCESSOR (D-SUB 25P F)		1.861.744.00
			3	2	2	10				CBUS DP PROCESSOR (C-SUB 25P F)		1.861.744.00
			3	2	2	11				CBUS DP PROCESSOR (C-SUB 25P F)		1.861.744.00
			3	2	2	12				CBUS DP PROCESSOR (C-SUB 25P F)		1.861.744.00
			3	2	2	13				CBUS DP PROCESSOR (C-SUB 25P F)		1.861.744.00
			3	2	4	1				POWER CCP KEYBOARD (FLATCABEL 10P)		1.861.744.00
			3	2	4	3				POWER CCP KEYBOARD (FLATCABEL 10P)		1.861.744.00
			3	2	4	5				POWER CCP KEYBOARD (FLATCABEL 10P)		1.861.744.00
			3	2	4	7				POWER CCP KEYBOARD (FLATCABEL 10P)		1.861.744.00
			3	2	4	9				POWER CCP KEYBOARD (FLATCABEL 10P)		1.861.744.00
			3	3	1	5				CBUS REARPANEL RACK (C-SUB 25P M)		1.861.744.00
			3	3	1	6				CBUS REARPANEL RACK (D-SUB 25P M)		1.861.744.00
			3	3	1	17				CBUS REARPANEL RACK (D-SUB 25P M)		1.861.744.00
			3	3	1	18				CBUS REARPANEL RACK (C-SUB 25P M)		1.861.744.00
			3	3	6	1				DATA MP KEYBOARD (FLATCABLE 26P)		1.861.746.00
			3	3	6	3				DATA MP KEYBOARD (FLATCABLE 26P)		1.861.746.00
			3	8	1	1				DATA MP AMPLIF (FLATCAB. SOLD. 26P)		1.861.745.00
			3	8	1	3				DATA MP AMPLIF (FLATCAB. SOLD. 26P)		1.861.745.00
			3	9	1	14				DATA DP PROC (FLATCAB. SOLD. 26P.)		1.861.741.00
			3	9	1	16				DATA DP PROC (FLATCAB. SOLD. 26P.)		1.861.741.00
			3	9	1	18				DATA DP PROC (FLATCAB. SOLD. 26P.)		1.861.741.00
			3	9	1	20				DATA DP PROC (FLATCAB. SOLD. 26P.)		1.861.741.00
			3	9	1	22				DATA DP PROC (FLATCAB. SOLD. 26P.)		1.861.741.00
			3	9	1	24				DATA DP PROC (FLATCAB. SOLD. 26P.)		1.861.741.00
												./.

PUBLISHED: 12/86

WILLI STUDER AG * S I G N A L W I R E L I S T * 86/12/08 * 10:54 * P A G E 98 *

1.861.022.00 D820X PCM RECORDER * 86/08/27 - 00

SIGNAL NAME	COLOR	MI	ASY	GRP	ELM	PNT	S	LV	TYPE	DESCRIPTION OF ELEMENT	REMARK	ELEMENT NR.
<<— CONT.OF			3	9	1	26				DATA DP PROC (FLATCAB. SOLD. 26P.)		1.861.741.00
*G.O			3	10	2	1				POWER CCP TRANSC. (FLTCAB.SOLD.10P)		1.861.744.00
			3	10	2	3				POWER CCP TRANSC. (FLTCAB.SOLD.10P)		1.861.744.00
			3	10	2	5				POWER CCP TRANSC. (FLTCAB.SOLD.10P)		1.861.744.00
			3	10	2	7				POWER CCP TRANSC. (FLTCAB.SOLD.10P)		1.861.744.00
			3	10	2	9				POWER CCP TRANSC. (FLTCAB.SOLD.10P)		1.861.744.00
			5	3	1	18				HEAD-AMPLIFIER CONNECTOR (D-SUB 25)		1.861.805.00
			5	3	1	19				HEAD-AMPLIFIER CONNECTOR (D-SUB 25)		1.861.805.00
			5	3	1	20				HEAD-AMPLIFIER CONNECTOR (D-SUB 25)		1.861.805.00
			5	3	1	21				HEAD-AMPLIFIER CONNECTOR (D-SUB 25)		1.861.805.00
			11	20	32	1				TO ASSY1, GR80, EL21	P24	
			11	20	32	3				TO ASSY1, GR80, EL21	P24	
			11	20	32	5				TO ASSY1, GR80, EL21	P24	
			11	20	32	7				TO ASSY1, GR80, EL21	P24	
			11	20	32	9				TO ASSY1, GR80, EL21	P24	
			11	20	32	11				TO ASSY1, GR80, EL21	P24	
			11	20	32	13				TO ASSY1, GR80, EL21	P24	
			11	20	32	15				TO ASSY1, GR80, EL21	P24	
			11	20	32	17				TO ASSY1, GR80, EL21	P24	
			11	20	32	19				TO ASSY1, GR80, EL21	P24	
			11	20	32	21				TO ASSY1, GR80, EL21	P24	
			11	20	32	23				TO ASSY1, GR80, EL21	P24	
			11	20	32	25				TO ASSY1, GR80, EL21	P24	
			11	20	33	1				TO ASSY1, GR80, EL22	P25	
			11	20	33	3				TO ASSY1, GR80, EL22	P25	
			11	20	33	5				TO ASSY1, GR80, EL22	P25	
			11	20	33	7				TO ASSY1, GR80, EL22	P25	
			11	20	33	9				TO ASSY1, GR80, EL22	P25	
			11	20	33	11				TO ASSY1, GR80, EL22	P25	
			11	20	33	13				TO ASSY1, GR80, EL22	P25	
			11	20	33	15				TO ASSY1, GR80, EL22	P25	
			11	20	33	17				TO ASSY1, GR80, EL22	P25	
			11	20	33	19				TO ASSY1, GR80, EL22	P25	
			11	20	33	21				TO ASSY1, GR80, EL22	P25	
			11	20	33	23				TO ASSY1, GR80, EL22	P25	
			11	20	33	25				TO ASSY1, GR80, EL22	P25	
			11	20	51	16A				MASTER SYSCON INTERFACE	J12	1.861.721.00
			11	20	51	16B				MASTER SYSCON INTERFACE	J12	1.861.721.00
*G.OSENS	J		11	19	1	22			F	FROM GRP32, ELM02	J01	
	J		11	19	2	22			M	TO GRP21, ELM02	P01	
	J		11	20	61	5			L	WIRE FIELD (FROM GRP20, ELM7G)		
	J		11	20	70	22			F	FROM GRP21, ELM01	J13	
			11	32	2	22			M	OUTPUT	P01	
+0V—			1	73	2	10				BOX-RACK 2 (RACK) (25 PIN D-SUB)		1.861.583.00
			1	73	2	11				BOX-RACK 2 (RACK) (25 PIN D-SUB)		1.861.583.00
			1	73	2	12				BOX-RACK 2 (RACK) (25 PIN D-SUB)		1.861.583.00
			1	73	2	13				BOX-RACK 2 (RACK) (25 PIN D-SUB)		1.861.583.00
			1	80	15	10				BOX-RACK 2 TO REAR PANEL TD		1.861.583.00
			1	80	15	11				BOX-RACK 2 TO REAR PANEL TD		1.861.583.00
			1	80	15	12				BOX-RACK 2 TO REAR PANEL TD		1.861.583.00
			1	80	15	13				BOX-RACK 2 TO REAR PANEL TD		1.861.583.00
			4	1	1	1A				ANALOG OUTPUT		1.861.751.00

./.

WILLI STUDER AG * S I G N A L W I R E L I S T * 86/12/08 * 10:54 * P A G E 99 *

1.861.022.00 D820X PCM RECORDER * 86/08/27 - 00

SIGNAL NAME	COLOR	MI	ASY	GRP	ELM	PNT	S	LV	TYPE	DESCRIPTION OF ELEMENT	REMARK	ELEMENT NR.
<<— CONT.OF			4	1	1	1B				ANALOG OUTPUT		1.861.751.00
+0V—			4	1	1	1C				ANALOG OUTPUT		1.861.751.00
			4	1	1	2A				ANALOG OUTPUT		1.861.751.00
			4	1	1	2B				ANALOG OUTPUT		1.861.751.00
			4	1	1	2C				ANALOG OUTPUT		1.861.751.00
			4	1	1	3A				ANALOG OUTPUT		1.861.751.00
			4	1	1	3B				ANALOG OUTPUT		1.861.751.00
			4	1	1	3C				ANALOG OUTPUT		1.861.751.00
			4	1	1	32A				ANALOG OUTPUT		1.861.751.00
			4	1	1	32B				ANALOG OUTPUT		1.861.751.00
			4	1	1	32C				ANALOG OUTPUT		1.861.751.00
			4	1	2	1A				ANALOG INPUT		1.861.752.00
			4	1	2	1B				ANALOG INPUT		1.861.752.00
			4	1	2	1C				ANALOG INPUT		1.861.752.00
			4	1	2	2A				ANALOG INPUT		1.861.752.00
			4	1	2	2B				ANALOG INPUT		1.861.752.00
			4	1	2	2C				ANALOG INPUT		1.861.752.00
			4	1	2	3A				ANALOG INPUT		1.861.752.00
			4	1	2	3B				ANALOG INPUT		1.861.752.00
			4	1	2	3C				ANALOG INPUT		1.861.752.00
			4	1	2	32A				ANALOG INPUT		1.861.752.00
			4	1	2	32B				ANALOG INPUT		1.861.752.00
			4	1	2	32C				ANALOG INPUT		1.861.752.00
			4	1	3	1A				SPARE 1		
			4	1	3	1B				SPARE 1		
			4	1	3	1C				SPARE 1		
			4	1	3	2A				SPARE 1		
			4	1	3	2B				SPARE 1		
			4	1	3	2C				SPARE 1		
			4	1	3	3A				SPARE 1		
			4	1	3	3B				SPARE 1		
			4	1	3	3C				SPARE 1		
			4	1	3	30A				SPARE 1		
			4	1	3	30B				SPARE 1		
			4	1	3	30C				SPARE 1		
			4	1	3	31A				SPARE 1		
			4	1	3	31B				SPARE 1		
			4	1	3	31C				SPARE 1		
			4	1	3	32A				SPARE 1		
			4	1	3	32B				SPARE 1		
			4	1	3	32C				SPARE 1		
			4	1	4	1A				GAINS CONTROL		1.861.853.00
			4	1	4	1B				GAINS CONTROL		1.861.853.00
			4	1	4	1C				GAINS CONTROL		1.861.853.00
			4	1	4	2A				GAINS CONTROL		1.861.853.00
			4	1	4	2B				GAINS CONTROL		1.861.853.00
			4	1	4	2C				GAINS CONTROL		1.861.853.00
			4	1	4	3A				GAINS CONTROL		1.861.853.00
			4	1	4	3B				GAINS CONTROL		1.861.853.00
			4	1	4	3C				GAINS CONTROL		1.861.853.00
			4	1	4	30A				GAINS CONTROL		1.861.853.00
			4	1	4	30B				GAINS CONTROL		1.861.853.00
			4	1	4	30C				GAINS CONTROL		1.861.853.00
			4	1	4	31A				GAINS CONTROL		1.861.853.00

./.

PUBLISHED: 12/86

* WILLI STUDER AG * S I G N A L W I R E L I S T * 86/12/08 * 10:54 * P A G E 100 *

* 1.861.022.00 D820X PCM RECORDER * 86/08/27 - 00 *

SIGNAL NAME	COLOR	MI	ASY	GRP	ELM	PNT	S	LV	TYPE	DESCRIPTION OF ELEMENT	REMARK	ELEMENT NR.
<<-- CONT.OF			4	1	4	31B				GAINS CONTROL		1.861.853.00
+0V-			4	1	4	31C				GAINS CONTROL		1.861.853.00
			4	1	4	32A				GAINS CONTROL		1.861.853.00
			4	1	4	32B				GAINS CONTROL		1.861.853.00
			4	1	4	32C				GAINS CONTROL		1.861.853.00
			4	1	5	1A				DAPRO INTERFACE		1.861.854.00
			4	1	5	1B				DAPRO INTERFACE		1.861.854.00
			4	1	5	1C				DAPRO INTERFACE		1.861.854.00
			4	1	5	2A				DAPRO INTERFACE		1.861.854.00
			4	1	5	2B				DAPRO INTERFACE		1.861.854.00
			4	1	5	2C				DAPRO INTERFACE		1.861.854.00
			4	1	5	3A				DAPRO INTERFACE		1.861.854.00
			4	1	5	3B				DAPRO INTERFACE		1.861.854.00
			4	1	5	3C				DAPRO INTERFACE		1.861.854.00
			4	1	5	30A				DAPRO INTERFACE		1.861.854.00
			4	1	5	30B				DAPRO INTERFACE		1.861.854.00
			4	1	5	30C				DAPRO INTERFACE		1.861.854.00
			4	1	5	31A				DAPRO INTERFACE		1.861.854.00
			4	1	5	31B				DAPRO INTERFACE		1.861.854.00
			4	1	5	31C				DAPRO INTERFACE		1.861.854.00
			4	1	5	32A				DAPRO INTERFACE		1.861.854.00
			4	1	5	32B				DAPRO INTERFACE		1.861.854.00
			4	1	5	32C				DAPRO INTERFACE		1.861.854.00
			4	1	6	1A				DATA PROCESSOR		1.861.855.00
			4	1	6	1B				DATA PROCESSOR		1.861.855.00
			4	1	6	1C				DATA PROCESSOR		1.861.855.00
			4	1	6	2A				DATA PROCESSOR		1.861.855.00
			4	1	6	2B				DATA PROCESSOR		1.861.855.00
			4	1	6	2C				DATA PROCESSOR		1.861.855.00
			4	1	6	3A				DATA PROCESSOR		1.861.855.00
			4	1	6	3B				DATA PROCESSOR		1.861.855.00
			4	1	6	3C				DATA PROCESSOR		1.861.855.00
			4	1	6	30A				DATA PROCESSOR		1.861.855.00
			4	1	6	30B				DATA PROCESSOR		1.861.855.00
			4	1	6	30C				DATA PROCESSOR		1.861.855.00
			4	1	6	31A				DATA PROCESSOR		1.861.855.00
			4	1	6	31B				DATA PROCESSOR		1.861.855.00
			4	1	6	31C				DATA PROCESSOR		1.861.855.00
			4	1	6	32A				DATA PROCESSOR		1.861.855.00
			4	1	6	32B				DATA PROCESSOR		1.861.855.00
			4	1	6	32C				DATA PROCESSOR		1.861.855.00
			4	1	7	1A				COEFFICIENT GENERATOR		1.861.856.00
			4	1	7	1B				COEFFICIENT GENERATOR		1.861.856.00
			4	1	7	1C				COEFFICIENT GENERATOR		1.861.856.00
			4	1	7	2A				COEFFICIENT GENERATOR		1.861.856.00
			4	1	7	2B				COEFFICIENT GENERATOR		1.861.856.00
			4	1	7	2C				COEFFICIENT GENERATOR		1.861.856.00
			4	1	7	3A				COEFFICIENT GENERATOR		1.861.856.00
			4	1	7	3B				COEFFICIENT GENERATOR		1.861.856.00
			4	1	7	3C				COEFFICIENT GENERATOR		1.861.856.00
			4	1	7	30A				COEFFICIENT GENERATOR		1.861.856.00
			4	1	7	30B				COEFFICIENT GENERATOR		1.861.856.00
			4	1	7	30C				COEFFICIENT GENERATOR		1.861.856.00
			4	1	7	31A				COEFFICIENT GENERATOR		1.861.856.00

./.

* WILLI STUDER AG * S I G N A L W I R E L I S T * 86/12/08 * 10:54 * P A G E 101 *

* 1.861.022.00 D820X PCM RECORDER * 86/08/27 - 00 *

SIGNAL NAME	COLOR	MI	ASY	GRP	ELM	PNT	S	LV	TYPE	DESCRIPTION OF ELEMENT	REMARK	ELEMENT NR.
<<-- CONT.OF			4	1	7	31B				COEFFICIENT GENERATOR		1.861.856.00
+0V-			4	1	7	31C				COEFFICIENT GENERATOR		1.861.856.00
			4	1	7	32A				COEFFICIENT GENERATOR		1.861.856.00
			4	1	7	32B				COEFFICIENT GENERATOR		1.861.856.00
			4	1	7	32C				COEFFICIENT GENERATOR		1.861.856.00
			4	1	8	1A				CODEC CONTROL		1.861.857.00
			4	1	8	1B				CODEC CONTROL		1.861.857.00
			4	1	8	1C				CODEC CONTROL		1.861.857.00
			4	1	8	2A				CODEC CONTROL		1.861.857.00
			4	1	8	2B				CODEC CONTROL		1.861.857.00
			4	1	8	2C				CODEC CONTROL		1.861.857.00
			4	1	8	3A				CODEC CONTROL		1.861.857.00
			4	1	8	3B				CODEC CONTROL		1.861.857.00
			4	1	8	3C				CODEC CONTROL		1.861.857.00
			4	1	8	30A				CODEC CONTROL		1.861.857.00
			4	1	8	30B				CODEC CONTROL		1.861.857.00
			4	1	8	30C				CODEC CONTROL		1.861.857.00
			4	1	8	31A				CODEC CONTROL		1.861.857.00
			4	1	8	31B				CODEC CONTROL		1.861.857.00
			4	1	8	31C				CODEC CONTROL		1.861.857.00
			4	1	8	32A				CODEC CONTROL		1.861.857.00
			4	1	8	32B				CODEC CONTROL		1.861.857.00
			4	1	8	32C				CODEC CONTROL		1.861.857.00
			4	1	9	1A				CODEC MEMORY		1.861.858.00
			4	1	9	1B				CODEC MEMORY		1.861.858.00
			4	1	9	1C				CODEC MEMORY		1.861.858.00
			4	1	9	2A				CODEC MEMORY		1.861.858.00
			4	1	9	2B				CODEC MEMORY		1.861.858.00
			4	1	9	2C				CODEC MEMORY		1.861.858.00
			4	1	9	3A				CODEC MEMORY		1.861.858.00
			4	1	9	3B				CODEC MEMORY		1.861.858.00
			4	1	9	3C				CODEC MEMORY		1.861.858.00
			4	1	9	30A				CODEC MEMORY		1.861.858.00
			4	1	9	30B				CODEC MEMORY		1.861.858.00
			4	1	9	30C				CODEC MEMORY		1.861.858.00
			4	1	9	31A				CODEC MEMORY		1.861.858.00
			4	1	9	31B				CODEC MEMORY		1.861.858.00
			4	1	9	31C				CODEC MEMORY		1.861.858.00
			4	1	9	32A				CODEC MEMORY		1.861.858.00
			4	1	9	32B				CODEC MEMORY		1.861.858.00
			4	1	9	32C				CODEC MEMORY		1.861.858.00
			4	1	10	1A				TRANSFORMATTER		1.861.859.00
			4	1	10	1B				TRANSFORMATTER		1.861.859.00
			4	1	10	1C				TRANSFORMATTER		1.861.859.00
			4	1	10	2A				TRANSFORMATTER		1.861.859.00
			4	1	10	2B				TRANSFORMATTER		1.861.859.00
			4	1	10	2C				TRANSFORMATTER		1.861.859.00
			4	1	10	3A				TRANSFORMATTER		1.861.859.00
			4	1	10	3B				TRANSFORMATTER		1.861.859.00
			4	1	10	3C				TRANSFORMATTER		1.861.859.00
			4	1	10	30A				TRANSFORMATTER		1.861.859.00
			4	1	10	30B				TRANSFORMATTER		1.861.859.00
			4	1	10	30C				TRANSFORMATTER		1.861.859.00
			4	1	10	31A				TRANSFORMATTER		1.861.859.00

./.

PUBLISHED: 12/86

WILLI STUDER AG * S I G N A L W I R E L I S T * 86/12/08 * 10:54 * P A G E 102

1.861.022.00 D820X PCM RECORDER * 86/08/27 - 00

SIGNAL NAME	COLOR	MI	ASY	GRP	ELM	PNT	S	LV	TYPE	DESCRIPTION OF ELEMENT	REMARK	ELEMENT NR.
<<== CONT.OF			4	1	10	31B				TRANSFORMATTER		1.861.859.00
+0V-			4	1	10	31C				TRANSFORMATTER		1.861.859.00
			4	1	10	32A				TRANSFORMATTER		1.861.859.00
			4	1	10	32B				TRANSFORMATTER		1.861.859.00
			4	1	10	32C				TRANSFORMATTER		1.861.859.00
			4	1	11	1A				RUN PROCESSOR		1.861.860.00
			4	1	11	1B				RUN PROCESSOR		1.861.860.00
			4	1	11	1C				RUN PROCESSOR		1.861.860.00
			4	1	11	2A				RUN PROCESSOR		1.861.860.00
			4	1	11	2B				RUN PROCESSOR		1.861.860.00
			4	1	11	2C				RUN PROCESSOR		1.861.860.00
			4	1	11	3A				RUN PROCESSOR		1.861.860.00
			4	1	11	3B				RUN PROCESSOR		1.861.860.00
			4	1	11	3C				RUN PROCESSOR		1.861.860.00
			4	1	11	30A				RUN PROCESSOR		1.861.860.00
			4	1	11	30B				RUN PROCESSOR		1.861.860.00
			4	1	11	30C				RUN PROCESSOR		1.861.860.00
			4	1	11	31A				RUN PROCESSOR		1.861.860.00
			4	1	11	31B				RUN PROCESSOR		1.861.860.00
			4	1	11	31C				RUN PROCESSOR		1.861.860.00
			4	1	11	32A				RUN PROCESSOR		1.861.860.00
			4	1	11	32B				RUN PROCESSOR		1.861.860.00
			4	1	11	32C				RUN PROCESSOR		1.861.860.00
			4	1	12	1A				RT/TC CODEC		1.861.861.00
			4	1	12	1B				RT/TC CODEC		1.861.861.00
			4	1	12	1C				RT/TC CODEC		1.861.861.00
			4	1	12	2A				RT/TC CODEC		1.861.861.00
			4	1	12	2B				RT/TC CODEC		1.861.861.00
			4	1	12	2C				RT/TC CODEC		1.861.861.00
			4	1	12	3A				RT/TC CODEC		1.861.861.00
			4	1	12	3B				RT/TC CODEC		1.861.861.00
			4	1	12	3C				RT/TC CODEC		1.861.861.00
			4	1	12	30A				RT/TC CODEC		1.861.861.00
			4	1	12	30B				RT/TC CODEC		1.861.861.00
			4	1	12	30C				RT/TC CODEC		1.861.861.00
			4	1	12	31A				RT/TC CODEC		1.861.861.00
			4	1	12	31B				RT/TC CODEC		1.861.861.00
			4	1	12	31C				RT/TC CODEC		1.861.861.00
			4	1	12	32A				RT/TC CODEC		1.861.861.00
			4	1	12	32B				RT/TC CODEC		1.861.861.00
			4	1	12	32C				RT/TC CODEC		1.861.861.00
			4	1	13	1A				TIMING + TEST		1.861.862.00
			4	1	13	1B				TIMING + TEST		1.861.862.00
			4	1	13	1C				TIMING + TEST		1.861.862.00
			4	1	13	2A				TIMING + TEST		1.861.862.00
			4	1	13	2B				TIMING + TEST		1.861.862.00
			4	1	13	2C				TIMING + TEST		1.861.862.00
			4	1	13	3A				TIMING + TEST		1.861.862.00
			4	1	13	3B				TIMING + TEST		1.861.862.00
			4	1	13	3C				TIMING + TEST		1.861.862.00
			4	1	13	30A				TIMING + TEST		1.861.862.00
			4	1	13	30B				TIMING + TEST		1.861.862.00
			4	1	13	30C				TIMING + TEST		1.861.862.00
			4	1	13	31A				TIMING + TEST		1.861.862.00

./.

WILLI STUDER AG * S I G N A L W I R E L I S T * 86/12/08 * 10:54 * P A G E 103

1.861.022.00 D820X PCM RECORDER * 86/08/27 - 00

SIGNAL NAME	COLOR	MI	ASY	GRP	ELM	PNT	S	LV	TYPE	DESCRIPTION OF ELEMENT	REMARK	ELEMENT NR.
<<== CONT.OF			4	1	13	31B				TIMING + TEST		1.861.862.00
+0V-			4	1	13	31C				TIMING + TEST		1.861.862.00
			4	1	13	32A				TIMING + TEST		1.861.862.00
			4	1	13	32B				TIMING + TEST		1.861.862.00
			4	1	13	32C				TIMING + TEST		1.861.862.00
			4	1	14	1A				SYSTEM CONTROLLER 1		1.861.763.00
			4	1	14	1B				SYSTEM CONTROLLER 1		1.861.763.00
			4	1	14	1C				SYSTEM CONTROLLER 1		1.861.763.00
			4	1	14	2A				SYSTEM CONTROLLER 1		1.861.763.00
			4	1	14	2B				SYSTEM CONTROLLER 1		1.861.763.00
			4	1	14	2C				SYSTEM CONTROLLER 1		1.861.763.00
			4	1	14	3A				SYSTEM CONTROLLER 1		1.861.763.00
			4	1	14	3B				SYSTEM CONTROLLER 1		1.861.763.00
			4	1	14	3C				SYSTEM CONTROLLER 1		1.861.763.00
			4	1	14	30A				SYSTEM CONTROLLER 1		1.861.763.00
			4	1	14	30B				SYSTEM CONTROLLER 1		1.861.763.00
			4	1	14	30C				SYSTEM CONTROLLER 1		1.861.763.00
			4	1	14	31A				SYSTEM CONTROLLER 1		1.861.763.00
			4	1	14	31B				SYSTEM CONTROLLER 1		1.861.763.00
			4	1	14	31C				SYSTEM CONTROLLER 1		1.861.763.00
			4	1	14	32A				SYSTEM CONTROLLER 1		1.861.763.00
			4	1	14	32B				SYSTEM CONTROLLER 1		1.861.763.00
			4	1	14	32C				SYSTEM CONTROLLER 1		1.861.763.00
			4	1	15	1A				SYSTEM CONTROLLER 2		1.861.763.00
			4	1	15	1B				SYSTEM CONTROLLER 2		1.861.763.00
			4	1	15	1C				SYSTEM CONTROLLER 2		1.861.763.00
			4	1	15	2A				SYSTEM CONTROLLER 2		1.861.763.00
			4	1	15	2B				SYSTEM CONTROLLER 2		1.861.763.00
			4	1	15	2C				SYSTEM CONTROLLER 2		1.861.763.00
			4	1	15	3A				SYSTEM CONTROLLER 2		1.861.763.00
			4	1	15	3B				SYSTEM CONTROLLER 2		1.861.763.00
			4	1	15	3C				SYSTEM CONTROLLER 2		1.861.763.00
			4	1	15	30A				SYSTEM CONTROLLER 2		1.861.763.00
			4	1	15	30B				SYSTEM CONTROLLER 2		1.861.763.00
			4	1	15	30C				SYSTEM CONTROLLER 2		1.861.763.00
			4	1	15	31A				SYSTEM CONTROLLER 2		1.861.763.00
			4	1	15	31B				SYSTEM CONTROLLER 2		1.861.763.00
			4	1	15	31C				SYSTEM CONTROLLER 2		1.861.763.00
			4	1	15	32A				SYSTEM CONTROLLER 2		1.861.763.00
			4	1	15	32B				SYSTEM CONTROLLER 2		1.861.763.00
			4	1	15	32C				SYSTEM CONTROLLER 2		1.861.763.00
			4	1	21	7				CONNECTOR 6 (TERMINAL)		
			4	1	22	10				CONNECTOR 7 (BACKPANEL RACK 2)		
			4	1	22	11				CONNECTOR 7 (BACKPANEL RACK 2)		
			4	1	22	12				CONNECTOR 7 (BACKPANEL RACK 2)		
			4	1	22	13				CONNECTOR 7 (BACKPANEL RACK 2)		
			4	1	23	2A				POWER SUPPLY		1.861.515.00
			4	1	23	2B				POWER SUPPLY		1.861.515.00
			4	1	23	2C				POWER SUPPLY		1.861.515.00
			4	1	23	4A				POWER SUPPLY		1.861.515.00
			4	1	23	4B				POWER SUPPLY		1.861.515.00
			4	1	23	4C				POWER SUPPLY		1.861.515.00
			4	1	23	16A				POWER SUPPLY		1.861.515.00
			4	1	23	16B				POWER SUPPLY		1.861.515.00

./.

PUBLISHED: 12/86

* WILLI STUDER AG * S I G N A L W I R E L I S T * 86/12/08 * 10:54 * P A G E 104 *

* 1.861.022.00 D820X PCM RECORDER * 86/08/27 - 00 *

SIGNAL NAME	COLOR	MI	ASY	GRP	ELM	PNT	S	LV	TYPE	DESCRIPTION OF ELEMENT	REMARK	ELEMENT NR.
<<— CONT.OF			4	1	23	16C				POWER SUPPLY		1.861.515.00
+0V-			4	1	23	3CA				POWER SUPPLY		1.861.515.00
			4	1	23	30B				POWER SUPPLY		1.861.515.00
			4	1	23	3CC				POWER SUPPLY		1.861.515.00
			4	1	23	32A				POWER SUPPLY		1.861.515.00
			4	1	23	32B				POWER SUPPLY		1.861.515.00
			4	1	23	32C				POWER SUPPLY		1.861.515.00
			4	1	51	10				BOX-RACK 2 CONNECTOR (CABLE)		
			4	1	51	11				BOX-RACK 2 CONNECTOR (CABLE)		
			4	1	51	12				BOX-RACK 2 CONNECTOR (CABLE)		
			4	1	51	13				BOX-RACK 2 CONNECTOR (CABLE)		
			4	3	12	7				TEST (TERMINAL) (RS232)		
+10			2	1	4	16A				DETECTOR		1.861.804.00
			2	1	4	16B				DETECTOR		1.861.804.00
			2	1	4	16C				DETECTOR		1.861.804.00
			2	1	5	16A				WRITE AMPLIFIER		1.861.803.00
			2	1	5	16B				WRITE AMPLIFIER		1.861.803.00
			2	1	5	16C				WRITE AMPLIFIER		1.861.803.00
			2	1	6	16A				TAPE DECK MONITOR		1.861.802.00
			2	1	6	16B				TAPE DECK MONITOR		1.861.802.00
			2	1	6	16C				TAPE DECK MONITOR		1.861.802.00
			2	1	7	16A				PLAYBACK AMPLIFIER		1.861.801.00
			2	1	7	16B				PLAYBACK AMPLIFIER		1.861.801.00
			2	1	7	16C				PLAYBACK AMPLIFIER		1.861.801.00
			2	3	1	13				HEADBLOCK READ (P4) (D-SUB 25P)		1.861.801.00
			2	3	1	14				HEADBLOCK READ (P4) (D-SUB 25P)		1.861.801.00
			2	3	1	15				HEADBLOCK READ (P4) (D-SUB 25P)		1.861.801.00
			2	3	1	16				HEADBLOCK READ (P4) (D-SUB 25P)		1.861.801.00
			2	3	1	17				HEADBLOCK READ (P4) (D-SUB 25P)		1.861.801.00
			5	3	1	13				HEAD-AMPLIFIER CONNECTOR (D-SUB 25)		1.861.805.00
			5	3	1	14				HEAD-AMPLIFIER CONNECTOR (D-SUB 25)		1.861.805.00
			5	3	1	15				HEAD-AMPLIFIER CONNECTOR (D-SUB 25)		1.861.805.00
			5	3	1	16				HEAD-AMPLIFIER CONNECTOR (D-SUB 25)		1.861.805.00
			5	3	1	17				HEAD-AMPLIFIER CONNECTOR (D-SUB 25)		1.861.805.00
+15.0	2		1	79	1	11				POWER CONNECTOR (24 PIN MOLEX FEM)		
	2		1	79	2	11				POWER CONNECTOR (24 PIN MOLEX MALE)		
			1	79	3	5				CAGE PWR CONNECTOR (25 PIN D-SUB)		
			1	79	3	6				CAGE PWR CONNECTOR (25 PIN D-SUB)		
			1	79	3	17				CAGE PWR CONNECTOR (25 PIN D-SUB)		
			1	79	3	18				CAGE PWR CONNECTOR (25 PIN D-SUB)		
			1	79	3	19				CAGE PWR CONNECTOR (25 PIN D-SUB)		
			1	79	4	8				POWER CONNECTOR RACK (25 PIN D-SUB)		
			1	79	4	9				POWER CONNECTOR RACK (25 PIN D-SUB)		
			1	79	4	20				POWER CONNECTOR RACK (25 PIN D-SUB)		
			1	79	4	21				POWER CONNECTOR RACK (25 PIN D-SUB)		
			1	80	1	16A				CUE/PC DELAY		1.861.816.00
			1	80	1	16B				CUE/PC DELAY		1.861.816.00
			1	80	1	16C				CUE/PC DELAY		1.861.816.00
			1	80	2	16A				PDM MODULATOR		1.861.811.00
			1	80	2	16B				PDM MODULATOR		1.861.811.00
			1	80	2	16C				PDM MODULATOR		1.861.811.00
			1	80	3	16A				PDM DEMODULATOR 1		1.861.812.00

./.

* WILLI STUDER AG * S I G N A L W I R E L I S T * 86/12/08 * 10:54 * P A G E 105 *

* 1.861.022.00 D820X PCM RECORDER * 86/08/27 - 00 *

SIGNAL NAME	COLOR	MI	ASY	GRP	ELM	PNT	S	LV	TYPE	DESCRIPTION OF ELEMENT	REMARK	ELEMENT NR.
<<— CONT.OF			1	80	3	16B				PDM DEMODULATOR 1		1.861.812.00
+15.0			1	80	3	16C				PDM DEMODULATOR 1		1.861.812.00
			1	80	4	16A				PDM DEMODULATOR 2		1.861.812.00
			1	80	4	16B				PDM DEMODULATOR 2		1.861.812.00
			1	80	4	16C				PDM DEMODULATOR 2		1.861.812.00
			1	80	5	16A				SPARE 1		1.861.815.00
			1	80	5	16B				SPARE 1		1.861.815.00
			1	80	5	16C				SPARE 1		1.861.815.00
			1	80	6	16A				ANALOG ROUTING		1.861.814.00
			1	80	6	16B				ANALOG ROUTING		1.861.814.00
			1	80	6	16C				ANALOG ROUTING		1.861.814.00
			1	80	7	16A				PDM CONTROL		1.861.813.00
			1	80	7	16B				PDM CONTROL		1.861.813.00
			1	80	7	16C				PDM CONTROL		1.861.813.00
			1	80	8	16A				DISPLAY INTERFACE		1.861.817.00
			1	80	8	16B				DISPLAY INTERFACE		1.861.817.00
			1	80	8	16C				DISPLAY INTERFACE		1.861.817.00
			1	80	9	16A				SPARE 2		
			1	80	9	16B				SPARE 2		
			1	80	9	16C				SPARE 2		
			1	80	13	8				RACK PWR CONNECTOR (25 PIN D-SUB)		
			1	80	13	9				RACK PWR CONNECTOR (25 PIN D-SUB)		
			1	80	13	20				RACK PWR CONNECTOR (25 PIN D-SUB)		
			1	80	13	21				RACK PWR CONNECTOR (25 PIN D-SUB)		
	3		1	80	19	9				RACK-MONITOR PANEL (D-SUB CRIMP)		
	3		1	80	19	10				RACK-MONITOR PANEL (D-SUB CRIMP)		
	3		1	80	19	11				RACK-MONITOR PANEL (D-SUB CRIMP)		
			2	1	2	5				POWER DELTA MOLEX (P2) (D-SUB 25P)		1.861.895.00
			2	1	2	6				POWER DELTA MOLEX (P2) (D-SUB 25P)		1.861.895.00
			2	1	2	17				POWER DELTA MOLEX (P2) (D-SUB 25P)		1.861.895.00
			2	1	2	18				POWER DELTA MOLEX (P2) (D-SUB 25P)		1.861.895.00
			2	1	2	19				POWER DELTA MOLEX (P2) (D-SUB 25P)		1.861.895.00
			2	1	6	17A				TAPE DECK MONITOR		1.861.802.00
			2	1	6	17B				TAPE DECK MONITOR		1.861.802.00
			2	1	6	17C				TAPE DECK MONITOR		1.861.802.00
			2	1	7	17A				PLAYBACK AMPLIFIER		1.861.801.00
			2	1	7	17B				PLAYBACK AMPLIFIER		1.861.801.00
			2	1	7	17C				PLAYBACK AMPLIFIER		1.861.801.00
			3	3	1	9				CBUS REARPANEL RACK (D-SUB 25P M)		1.861.744.00
			3	3	1	10				CBUS REARPANEL RACK (D-SUB 25P M)		1.861.744.00
			3	3	1	11				CBUS REARPANEL RACK (D-SUB 25P M)		1.861.744.00
	2		11	19	1	11			F	FROM GRP32, ELMO2 J01		
	2		11	19	2	11			M	TO GRP21, ELMO2 P01		
			11	20	1	5				SPOOLING MOTOR DRIVE AMP. LEFT P01		
			11	20	2	5				SPOOLING MOTOR DRIVE AMP. RIGHT P02		
			11	20	3	5				CAPSTAN MOTOR DRIVE AMPLIFIER P03		
			11	20	4	5				PAR. CONT. INT. SYNCHRONIZER P04		
			11	20	5	5				SPOOLING MOTOR SUPPLY P05		
			11	20	6	5				EXT. SENSORS P06		
			11	20	9	5				TACHO SENSOR (SPOOLING M. LEFT) P09		
			11	20	10	5				TACHO SENSOR (SPOOLING M. RIGHT) P10		
			11	20	11	5				MOVE SENSOR P11		
			11	20	12	5				TAPE TENSION SENSOR, LEFT P12		
			11	20	13	5				TAPE TENSION SENSOR, RIGHT P13		

./.

PUBLISHED: 12/86

* WILLI STUDER AG * S I G N A L W I R E L I S T * 86/12/08 * 10:54 * P A G E 106 *

* 1.861.022.00 D820X PCM RECORDER * 86/08/27 - 00 *

SIGNAL NAME	COLOR	MI	ASY	GRP	ELM	PNT	S	LV	TYPE	DESCRIPTION OF ELEMENT		REMARK	ELEMENT NR.
<<-- CONT.OF			11	20	14	14				FUSE FAILURE DETECTOR	P14		
+15.0			11	20	17	5				TO HEAD BLOCK ASSEMBLY	P17		
			11	20	18	5				VU-METER PANEL, EXTERNAL	P18		
			11	20	19	5				SOURCE SELECTOR	P19		
			11	20	40	18				SPOOLING MOTOR DRIVER	J01		1.820.759.00
			11	20	41	18				CAPSTAN CONTROL UNIT	J02		1.820.764.00
			11	20	42	15A				CAPSTAN INTERFACE	J03		1.820.727.00
			11	20	42	15B				CAPSTAN INTERFACE	J03		1.820.727.00
			11	20	43	15A				TAPE DECK PERIPHERY CONTR.	J04		1.820.762.00
			11	20	43	15B				TAPE DECK PERIPHERY CONTR.	J04		1.820.762.00
			11	20	44	18				TAPE DECK COUNTER / TIMER	J05		1.820.761.00
			11	20	45	18				SPOOLING MOTOR CONTROLLER	J06		1.820.760.00
			11	20	47	18				TAPE DECK SERIAL INTERFACE	J08		1.820.763.00
			11	20	48	15A				MASTER SERIAL INTERFACE	J09		1.820.753.00
			11	20	48	15B				MASTER SERIAL INTERFACE	J09		1.820.753.00
			11	20	50	18				SMPTE/EBU INTERFACE	J11		1.820.751.00
	2		11	20	61	10			L	WIRE FIELD (FROM GRP20. ELM70)			
	2		11	20	70	11			F	FROM GRP21. ELM01	J13		
			11	30	2	5				FROM GRP20. ELM02	P01		
			11	31	3	5				FROM GRP20. ELM05	P02		
			11	32	2	11			M	OUTPUT	P01		
			11	33	2	5				FROM GRP20. ELM01	P01		
			11	36	1	5				TACHO SENSOR	P01		1.820.771.00
			11	37	1	5				TACHO SENSOR	P01		1.820.771.00
			11	38	1	6			F	FROM GRP39. ELM02	J01		
			11	39	1	5				FROM GRP20. ELM03	P01		
			11	39	2	6			M	TO GRP38. ELM01	P02		
			11	42	1	5				FROM GRP20. ELM12	P01		
			11	43	1	5				FROM GRP20. ELM13	P01		
			11	44	1	5				FROM GRP20. ELM06	P01		
			11	45	1	5				FROM GRP20. ELM11	P01		
			11	59	1	14				FROM GRP20. ELM14	P01		
+20			4	1	1	21A				ANALOG OUTPUT			1.861.751.00
			4	1	1	21B				ANALOG OUTPUT			1.861.751.00
			4	1	1	21C				ANALOG OUTPUT			1.861.751.00
			4	1	2	21A				ANALOG INPUT			1.861.752.00
			4	1	2	21B				ANALOG INPUT			1.861.752.00
			4	1	2	21C				ANALOG INPUT			1.861.752.00
			4	1	4	23C				GAINS CONTROL			1.861.853.00
			4	1	12	20A				RT/TC CODEC			1.861.861.00
			4	1	12	20B				RT/TC CODEC			1.861.861.00
			4	1	12	20C				RT/TC CODEC			1.861.861.00
			4	1	13	21A				TIMING + TEST			1.861.862.00
			4	1	13	21B				TIMING + TEST			1.861.862.00
			4	1	13	21C				TIMING + TEST			1.861.862.00
			4	1	14	26A				SYSTEM CONTROLLER 1			1.861.763.00
			4	1	15	26A				SYSTEM CONTROLLER 2			1.861.763.00
			4	1	23	22A				POWER SUPPLY			1.861.515.00
			4	1	23	22B				POWER SUPPLY			1.861.515.00
			4	1	23	22C				POWER SUPPLY			1.861.515.00

* WILLI STUDER AG * S I G N A L W I R E L I S T * 86/12/08 * 10:54 * P A G E 107 *

* 1.861.022.00 D820X PCM RECORDER * 86/08/27 - 00 *

SIGNAL NAME	COLOR	MI	ASY	GRP	ELM	PNT	S	LV	TYPE	DESCRIPTION OF ELEMENT		REMARK	ELEMENT NR.
+20PC			1	73	2	22				BOX-RACK 2 (RACK)	(25 PIN D-SUB)		1.861.583.00
			1	73	2	23				BOX-RACK 2 (RACK)	(25 PIN D-SUB)		1.861.583.00
			1	73	2	24				BOX-RACK 2 (RACK)	(25 PIN D-SUB)		1.861.583.00
			1	73	2	25				BOX-RACK 2 (RACK)	(25 PIN D-SUB)		1.861.583.00
			1	74	1	19				RACK-CCP/DP	(25-PIN D-SUB)		1.861.000.00
			1	74	1	20				RACK-CCP/DP	(25-PIN D-SUB)		1.861.000.00
			1	74	1	21				RACK-CCP/DP	(25-PIN D-SUB)		1.861.000.00
			1	74	1	22				RACK-CCP/DP	(25-PIN D-SUB)		1.861.000.00
			1	74	1	23				RACK-CCP/DP	(25-PIN D-SUB)		1.861.000.00
			1	74	1	24				RACK-CCP/DP	(25-PIN D-SUB)		1.861.000.00
			1	74	1	25				RACK-CCP/DP	(25-PIN D-SUB)		1.861.000.00
			1	79	4	4				POWER CONNECTOR RACK	(25 PIN D-SUB)		
			1	79	4	5				POWER CONNECTOR RACK	(25 PIN D-SUB)		
			1	79	4	16				POWER CONNECTOR RACK	(25 PIN D-SUB)		
			1	79	4	17				POWER CONNECTOR RACK	(25 PIN D-SUB)		
			1	80	13	4				RACK PWR CONNECTOR	(25 PIN D-SUB)		
			1	80	13	5				RACK PWR CONNECTOR	(25 PIN D-SUB)		
			1	80	13	16				RACK PWR CONNECTOR	(25 PIN D-SUB)		
			1	80	13	17				RACK PWR CONNECTOR	(25 PIN D-SUB)		
			1	80	15	22				BOX-RACK 2 TO REAR PANEL TO			1.861.583.00
			1	80	15	23				BOX-RACK 2 TO REAR PANEL TO			1.861.583.00
			1	80	15	24				BOX-RACK 2 TO REAR PANEL TO			1.861.583.00
			1	80	15	25				BOX-RACK 2 TO REAR PANEL TO			1.861.583.00
			1	80	18	19				DISPLAY PANEL/CCP	(25 PIN D-SUB)		
			1	80	18	20				DISPLAY PANEL/CCP	(25 PIN D-SUB)		
			1	80	18	21				DISPLAY PANEL/CCP	(25 PIN D-SUB)		
			1	80	18	22				DISPLAY PANEL/CCP	(25 PIN D-SUB)		
			1	80	18	23				DISPLAY PANEL/CCP	(25 PIN D-SUB)		
			1	80	18	24				DISPLAY PANEL/CCP	(25 PIN D-SUB)		
			1	80	18	25				DISPLAY PANEL/CCP	(25 PIN D-SUB)		
			3	1	1	19				CBUS CCP TRANSCEIVER	(D-SUB 25P F)	0	1.861.742.00
			3	1	1	20				CBUS CCP TRANSCEIVER	(D-SUB 25P F)	0	1.861.742.00
			3	1	1	21				CBUS CCP TRANSCEIVER	(D-SUB 25P F)	0	1.861.742.00
			3	1	1	22				CBUS CCP TRANSCEIVER	(D-SUB 25P F)	0	1.861.742.00
			3	1	1	23				CBUS CCP TRANSCEIVER	(D-SUB 25P F)	0	1.861.742.00
			3	1	1	24				CBUS CCP TRANSCEIVER	(D-SUB 25P F)	0	1.861.742.00
			3	1	1	25				CBUS CCP TRANSCEIVER	(D-SUB 25P F)	0	1.861.742.00
			3	2	1	19				BUS REARPANEL TO	(D-SUB 25P M)		1.861.744.00
			3	2	1	20				BUS REARPANEL TO	(D-SUB 25P M)		1.861.744.00
			3	2	1	21				BUS REARPANEL TO	(D-SUB 25P M)		1.861.744.00
			3	2	1	22				BUS REARPANEL TO	(D-SUB 25P M)		1.861.744.00
			3	2	1	23				BUS REARPANEL TO	(D-SUB 25P M)		1.861.744.00
			3	2	1	24				BUS REARPANEL TO	(D-SUB 25P M)		1.861.744.00
			3	2	1	25				BUS REARPANEL TO	(D-SUB 25P M)		1.861.744.00
			3	2	2	19				CBUS DP PROCESSOR	(D-SUB 25P F)		1.861.744.00
			3	2	2	20				CBUS DP PROCESSOR	(D-SUB 25P F)		1.861.744.00
			3	2	2	21				CBUS DP PROCESSOR	(D-SUB 25P F)		1.861.744.00
			3	2	2	22				CBUS DP PROCESSOR	(D-SUB 25P F)		1.861.744.00
			3	2	2	23				CBUS DP PROCESSOR	(D-SUB 25P F)		1.861.744.00
			3	2	2	24				CBUS DP PROCESSOR	(D-SUB 25P F)		1.861.744.00
			3	2	2	25				CBUS DP PROCESSOR	(D-SUB 25P F)		1.861.744.00
			4	1	14	26B				SYSTEM CONTROLLER 1			1.861.763.00
			4	1	15	26B				SYSTEM CONTROLLER 2			1.861.763.00
			4	1	22	22				CONNECTOR 7	(BACKPANEL RACK 2)		
			4	1	22	23				CONNECTOR 7	(BACKPANEL RACK 2)		

./.

PUBLISHED: 12/86

* WILLI STUDER AG * S I G N A L W I R E L I S T * 86/12/08 * 10:54 * P A G E 108 *

* 1.861.022.00 D820X PCM RECORDER * 86/08/27 - 00 *

SIGNAL NAME	COLOR	MI	ASY	GRP	ELM	PNT	S	LV	TYPE	DESCRIPTION OF ELEMENT	REMARK	ELEMENT NR.
<<-- CONT.OF			4	1	22	24				CONNECTOR 7 (BACKPANEL RACK 2)		
+20PC			4	1	22	25				CONNECTOR 7 (BACKPANEL RACK 2)		
			4	1	23	14A				POWER SUPPLY		1.861.515.00
			4	1	23	14B				POWER SUPPLY		1.861.515.00
			4	1	23	14C				POWER SUPPLY		1.861.515.00
			4	1	51	22				BOX-RACK 2 CONNECTOR (CABLE)		
			4	1	51	23				BOX-RACK 2 CONNECTOR (CABLE)		
			4	1	51	24				BOX-RACK 2 CONNECTOR (CABLE)		
			4	1	51	25				BOX-RACK 2 CONNECTOR (CABLE)		
+24.0	7		1	79	1	15				POWER CONNECTOR (24 PIN MOLEX FEM)		
	7		1	79	2	15				POWER CONNECTOR (24 PIN MOLEX MALE)		
	7		11	19	1	15		F		FROM GRP32. ELM02 J01		
	7		11	19	2	15		M		TO GRP21. ELM02 P01		
			11	20	14	4				FUSE FAILURE DETECTOR P14		
			11	20	15	5				DISPLAY DRIVER P15		
			11	20	15	6				DISPLAY DRIVER P15		
			11	20	17	24				TO HEAD BLOCK ASSEMBLY P17		
			11	20	18	24				VU-METER PANEL. EXTERNAL P18		
	7		11	20	62	11		U		WIRE FIELD		
	7		11	20	62	12		U		WIRE FIELD		
	7		11	20	62	13		U		WIRE FIELD		
	7		11	20	70	15		F		FROM GRP21. ELM01 J13		
	7		11	20	72	1		F		TO BRAKE SOLENOID. LEFT		
	7		11	20	73	1		F		TO BRAKE SOLENOID. RIGHT		
			11	32	2	15		M		CUTPUT P01		
	7		11	40	1	1		M		BRAKE SOLENOID		
	7		11	41	1	1		M		BRAKE SOLENOID		
			11	50	1	5				FROM GRP20. ELM15 P01		
			11	50	1	6				FROM GRP20. ELM15 P01		
			11	59	1	4				FROM GRP20. ELM14 P01		
+24.0L			11	48	1	5				FROM GRP50. ELM03		
			11	48	3	1				WIRE FIELD		
			11	48	3	2				WIRE FIELD		
			11	50	3	5				CONNECTOR PUSHBUTTON ASSEMBLY P07		
+24.0REM			11	25	2	25		B		CONNECTOR SYNCHRONIZER J02		
			11	25	3	25		B		CONN. PARALLEL REMOTE CONTROL J03		
			11	27	3	24				TO CONNECTOR SYNCHRONIZER P03		
			11	27	4	24				TO CONN. PARALLEL REMOTE CONTR. P04		
+26.0	1		1	79	1	20				POWER CONNECTOR (24 PIN MOLEX FEM)		
	1		1	79	2	20				POWER CONNECTOR (24 PIN MOLEX MALE)		
	1		11	19	1	20		F		FROM GRP32. ELM02 J01		
	1		11	19	2	20		M		TO GRP21. ELM02 P01		
			11	20	7	5				TAPE LIFT MOTOR. LEFT P07		
			11	20	8	5				TAPE LIFT MOTOR. RIGHT P08		
			11	20	14	15				FUSE FAILURE DETECTOR P14		
	1		11	20	61	2		L		WIRE FIELD (FROM GRP20. ELM70)		
	1		11	20	70	20		F		FROM GRP21. ELM01 J13		
			11	32	2	20		M		CUTPUT P01		
			11	46	1	5				FROM GRP20. ELM07 P01		
			11	47	1	5				FROM GRP20. ELM08 P01		
			11	59	1	15				FROM GRP20. ELM14 P01		

* WILLI STUDER AG * S I G N A L W I R E L I S T * 86/12/08 * 10:54 * P A G E 109 *

* 1.861.022.00 D820X PCM RECORDER * 86/08/27 - 00 *

SIGNAL NAME	COLOR	MI	ASY	GRP	ELM	PNT	S	LV	TYPE	DESCRIPTION OF ELEMENT	REMARK	ELEMENT NR.
+5.0			3	1	2	2				DATA DP KEYBOARD (FLATCABLE 26P)		1.861.742.00
			3	1	2	4				DATA DP KEYBOARD (FLATCABLE 26P)		1.861.742.00
			3	1	2	6				DATA DP KEYBOARD (FLATCABLE 26P)		1.861.742.00
			3	1	2	8				DATA DP KEYBOARD (FLATCABLE 26P)		1.861.742.00
			3	1	2	10				DATA DP KEYBOARD (FLATCABLE 26P)		1.861.742.00
			3	1	2	12				DATA DP KEYBOARD (FLATCABLE 26P)		1.861.742.00
			3	2	4	2				POWER CCP KEYBOARD (FLATCABEL 10P)		1.861.744.00
			3	2	4	4				POWER CCP KEYBOARD (FLATCABEL 10P)		1.861.744.00
			3	2	4	6				POWER CCP KEYBOARD (FLATCABEL 10P)		1.861.744.00
			3	2	4	8				POWER CCP KEYBOARD (FLATCABEL 10P)		1.861.744.00
			3	2	4	10				POWER CCP KEYBOARD (FLATCABEL 10P)		1.861.744.00
			3	3	6	23				DATA MP KEYBOARD (FLATCABLE 26P)		1.861.746.00
			3	3	6	25				DATA MP KEYBOARD (FLATCABLE 26P)		1.861.746.00
			3	8	1	23				DATA MP AMPLIF (FLATCAB. SOLD. 26P)		1.861.745.00
			3	8	1	25				DATA MP AMPLIF (FLATCAB. SOLD. 26P)		1.861.745.00
			3	9	1	2				DATA DP PROC (FLATCAB. SOLD. 26P.)		1.861.741.00
			3	9	1	4				DATA DP PROC (FLATCAB. SOLD. 26P.)		1.861.741.00
			3	9	1	6				DATA DP PROC (FLATCAB. SOLD. 26P.)		1.861.741.00
			3	9	1	8				DATA DP PROC (FLATCAB. SOLD. 26P.)		1.861.741.00
			3	9	1	10				DATA DP PROC (FLATCAB. SOLD. 26P.)		1.861.741.00
			3	9	1	12				DATA DP PROC (FLATCAB. SOLD. 26P.)		1.861.741.00
			3	10	2	2				POWER CCP TRANSC. (FLTCAB.SOLD.10P)		1.861.744.00
			3	10	2	4				POWER CCP TRANSC. (FLTCAB.SOLD.10P)		1.861.744.00
			3	10	2	6				POWER CCP TRANSC. (FLTCAB.SOLD.10P)		1.861.744.00
			3	10	2	8				POWER CCP TRANSC. (FLTCAB.SOLD.10P)		1.861.744.00
			3	10	2	10				POWER CCP TRANSC. (FLTCAB.SOLD.10P)		1.861.744.00
+5.6			1	70	1	1				SIGNAL QUALITY (26-PIN FLATCABLE)		1.861.731.00
			1	70	1	2				SIGNAL QUALITY (26-PIN FLATCABLE)		1.861.731.00
			1	70	1	3				SIGNAL QUALITY (26-PIN FLATCABLE)		1.861.731.00
			1	70	1	4				SIGNAL QUALITY (26-PIN FLATCABLE)		1.861.731.00
			1	70	1	5				SIGNAL QUALITY (26-PIN FLATCABLE)		1.861.731.00
			1	70	1	6				SIGNAL QUALITY (26-PIN FLATCABLE)		1.861.731.00
	3		1	79	1	1				POWER CONNECTOR (24 PIN MOLEX FEM)		
	3		1	79	1	2				POWER CONNECTOR (24 PIN MOLEX FEM)		
	3		1	79	2	1				POWER CONNECTOR (24 PIN MOLEX MALE)		
	3		1	79	2	2				POWER CONNECTOR (24 PIN MOLEX MALE)		
			1	79	4	1				POWER CONNECTOR RACK (25 PIN D-SUB)		
			1	79	4	2				POWER CONNECTOR RACK (25 PIN D-SUB)		
			1	79	4	3				POWER CONNECTOR RACK (25 PIN D-SUB)		
			1	79	4	14				POWER CONNECTOR RACK (25 PIN D-SUB)		
			1	79	4	15				POWER CONNECTOR RACK (25 PIN D-SUB)		
			1	80	1	32A				CUE/PQ DELAY		1.861.816.00
			1	80	1	32B				CUE/PC DELAY		1.861.816.00
			1	80	1	32C				CUE/PQ DELAY		1.861.816.00
			1	80	2	32A				PDM MODULATOR		1.861.811.00
			1	80	2	32B				PDM MODULATOR		1.861.811.00
			1	80	2	32C				PDM MODULATOR		1.861.811.00
			1	80	3	32A				PDM DEMODULATOR 1		1.861.812.00
			1	80	3	32B				PDM DEMODULATOR 1		1.861.812.00
			1	80	3	32C				PDM DEMODULATOR 1		1.861.812.00
			1	80	4	32A				PDM DEMODULATOR 2		1.861.812.00
			1	80	4	32B				PDM DEMODULATOR 2		1.861.812.00
			1	80	4	32C				PDM DEMODULATOR 2		1.861.812.00
			1	80	5	32A				SPARE 1		1.861.815.00

-/-

* WILLI STUDER AG * S I G N A L W I R E L I S T * 86/12/08 * 10:54 * P A G E 110 *

* 1.861.022.JC D820X PCM RECORDER * 86/08/27 - 00 *

SIGNAL NAME	COLOR	MI	ASY	GRP	ELM	PNT	S	LV	TYPE	DESCRIPTION OF ELEMENT	REMARK	ELEMENT NR.
<<-- CONT.OF			1	8C	5	32B				SPARE 1		1.861.815.00
+5.6			1	8D	5	32C				SPARE 1		1.861.815.00
			1	8D	6	32A				ANALOG ROUTING		1.861.814.00
			1	8C	6	32B				ANALOG ROUTING		1.861.814.00
			1	8D	6	32C				ANALOG ROUTING		1.861.814.00
			1	8C	7	32A				PDM CONTROL		1.861.813.00
			1	8C	7	32B				PDM CONTROL		1.861.813.00
			1	8D	7	32C				PDM CONTROL		1.861.813.00
			1	8C	8	32A				DISPLAY INTERFACE		1.861.817.00
			1	8C	8	32B				DISPLAY INTERFACE		1.861.817.00
			1	8C	8	32C				DISPLAY INTERFACE		1.861.817.00
			1	8C	9	32A				SPARE 2		
			1	8D	9	32B				SPARE 2		
			1	8D	9	32C				SPARE 2		
			1	8C	13	1				RACK PWR CONNECTOR (25 PIN D-SUB)		
			1	8C	13	2				RACK PWR CONNECTOR (25 PIN D-SUB)		
			1	9D	13	3				RACK PWR CONNECTOR (25 PIN D-SUB)		
			1	8C	13	14				RACK PWR CONNECTOR (25 PIN D-SUB)		
			1	8C	13	15				RACK PWR CONNECTOR (25 PIN D-SUB)		
			1	8D	17	1				SIGNAL QUALITY DISPL.(25 PIN D-SUB)		
			1	8C	17	2				SIGNAL QUALITY DISPL.(25 PIN D-SUB)		
			1	8D	17	3				SIGNAL QUALITY DISPL.(25 PIN D-SUB)		
			1	3C	17	14				SIGNAL QUALITY DISPL.(25 PIN D-SUB)		
			1	8C	17	15				SIGNAL QUALITY DISPL.(25 PIN D-SUB)		
			1	8D	17	16				SIGNAL QUALITY DISPL.(25 PIN D-SUB)		
	2		1	8C	19	7				RACK-MONITOR PANEL (D-SUB CRIMP)		
	2		1	8D	19	8				RACK-MONITOR PANEL (D-SUB CRIMP)		
	2		1	8D	19	19				RACK-MONITOR PANEL (D-SUB CRIMP)		
	2		1	8D	19	20				RACK-MONITOR PANEL (D-SUB CRIMP)		
	2		1	8D	19	21				RACK-MONITOR PANEL (D-SUB CRIMP)		
			3	3	1	7				CBUS REARPANEL RACK (D-SUB 25P M)		1.861.744.00
			3	3	1	8				CBUS REARPANEL RACK (D-SUB 25P M)		1.861.744.00
			3	3	1	19				CBUS REARPANEL RACK (D-SUB 25P M)		1.861.744.00
			3	3	1	20				CBUS REARPANEL RACK (D-SUB 25P M)		1.861.744.00
			3	3	1	21				CBUS REARPANEL RACK (D-SUB 25P M)		1.861.744.00
			11	20	51	18A				MASTER SYSCON INTERFACE J12		1.861.721.00
			11	20	51	18B				MASTER SYSCON INTERFACE J12		1.861.721.00
+5.6SENS	J		1	79	1	3				POWER CONNECTOR (24 PIN MOLEX FEM)		
	J		1	79	2	3				POWER CONNECTOR (24 PIN MOLEX MALE)		
	4		11	19	1	3		F		FROM GRP32. ELMO2 J01		
	4		11	19	2	3		M		TO GRP21. ELMO2 P01		
	4		11	20	62	3		U		WIRE FIELD		
	4		11	20	70	3		F		FROM GRP21. ELMO1 J13		
			11	32	2	3		M		OUTPUT P01		
+5.6V			1	79	3	1				CAGE PWR CONNECTOR (25 PIN D-SUB)		
			1	79	3	2				CAGE PWR CONNECTOR (25 PIN D-SUB)		
			1	79	3	3				CAGE PWR CONNECTOR (25 PIN D-SUB)		
			1	79	3	4				CAGE PWR CONNECTOR (25 PIN D-SUB)		
			1	79	3	14				CAGE PWR CONNECTOR (25 PIN D-SUB)		
			1	79	3	15				CAGE PWR CONNECTOR (25 PIN D-SUB)		
			1	79	3	16				CAGE PWR CONNECTOR (25 PIN D-SUB)		
			2	1	2	1				POWER DELTA MOLEX (P2) (D-SUB 25P)		1.861.895.00

./.

* WILLI STUDER AG * S I G N A L W I R E L I S T * 86/12/08 * 10:54 * P A G E 111 *

* 1.861.022.00 D820X PCM RECORDER * 86/08/27 - 00 *

SIGNAL NAME	COLOR	MI	ASY	GRP	ELM	PNT	S	LV	TYPE	DESCRIPTION OF ELEMENT	REMARK	ELEMENT NR.
<<-- CONT.OF			2	1	2	2				POWER DELTA MOLEX (P2) (D-SUB 25P)		1.861.895.00
+5.6V			2	1	2	3				POWER DELTA MOLEX (P2) (D-SUB 25P)		1.861.895.00
			2	1	2	4				POWER DELTA MOLEX (P2) (D-SUB 25P)		1.861.895.00
			2	1	2	14				POWER DELTA MOLEX (P2) (D-SUB 25P)		1.861.895.00
			2	1	2	15				POWER DELTA MOLEX (P2) (D-SUB 25P)		1.861.895.00
			2	1	2	16				POWER DELTA MOLEX (P2) (D-SUB 25P)		1.861.895.00
			2	1	4	32A				DETECTOR		1.861.804.00
			2	1	4	32B				DETECTOR		1.861.804.00
			2	1	4	32C				DETECTOR		1.861.804.00
			2	1	5	32A				WRITE AMPLIFIER		1.861.803.00
			2	1	5	32B				WRITE AMPLIFIER		1.861.803.00
			2	1	5	32C				WRITE AMPLIFIER		1.861.803.00
			2	1	6	32A				TAPE DECK MONITOR		1.861.802.00
			2	1	6	32B				TAPE DECK MONITOR		1.861.802.00
			2	1	6	32C				TAPE DECK MONITOR		1.861.802.00
			2	1	7	32A				PLAYBACK AMPLIFIER		1.861.801.00
			2	1	7	32B				PLAYBACK AMPLIFIER		1.861.801.00
			2	1	7	32C				PLAYBACK AMPLIFIER		1.861.801.00
+5V-			4	1	1	5A				ANALOG OUTPUT		1.861.751.00
			4	1	1	5B				ANALOG OUTPUT		1.861.751.00
			4	1	1	5C				ANALOG OUTPUT		1.861.751.00
			4	1	1	6A				ANALOG OUTPUT		1.861.751.00
			4	1	1	6B				ANALOG OUTPUT		1.861.751.00
			4	1	1	6C				ANALOG OUTPUT		1.861.751.00
			4	1	1	27A				ANALOG OUTPUT		1.861.751.00
			4	1	1	27B				ANALOG OUTPUT		1.861.751.00
			4	1	1	27C				ANALOG OUTPUT		1.861.751.00
			4	1	1	28A				ANALOG OUTPUT		1.861.751.00
			4	1	1	28B				ANALOG OUTPUT		1.861.751.00
			4	1	1	28C				ANALOG OUTPUT		1.861.751.00
			4	1	2	5A				ANALOG INPUT		1.861.752.00
			4	1	2	5B				ANALOG INPUT		1.861.752.00
			4	1	2	5C				ANALOG INPUT		1.861.752.00
			4	1	2	6A				ANALOG INPUT		1.861.752.00
			4	1	2	6B				ANALOG INPUT		1.861.752.00
			4	1	2	6C				ANALOG INPUT		1.861.752.00
			4	1	2	27A				ANALOG INPUT		1.861.752.00
			4	1	2	27B				ANALOG INPUT		1.861.752.00
			4	1	2	27C				ANALOG INPUT		1.861.752.00
			4	1	2	28A				ANALOG INPUT		1.861.752.00
			4	1	2	28B				ANALOG INPUT		1.861.752.00
			4	1	2	28C				ANALOG INPUT		1.861.752.00
			4	1	3	5A				SPARE 1		
			4	1	3	5B				SPARE 1		
			4	1	3	5C				SPARE 1		
			4	1	3	6A				SPARE 1		
			4	1	3	6B				SPARE 1		
			4	1	3	6C				SPARE 1		
			4	1	3	27A				SPARE 1		
			4	1	3	27B				SPARE 1		
			4	1	3	27C				SPARE 1		
			4	1	3	28A				SPARE 1		
			4	1	3	28B				SPARE 1		

./.

PUBLISHED: 12/86

WILLI STUDER AG * S I G N A L W I R E L I S T * 86/12/08 * 10:54 * P A G E 112

1.861.022.00 D820X PCM RECORDER * 86/08/27 - 00

SIGNAL NAME	COLOR	MI	ASY	GRP	ELM	PNT	S	LV	TYPE	DESCRIPTION OF ELEMENT	REMARK	ELEMENT NR.
<<— CONT.OF			4	1	3	28C				SPARE 1		
+5V-			4	1	4	5A				GAINS CONTROL		1.861.853.00
			4	1	4	5B				GAINS CONTROL		1.861.853.00
			4	1	4	5C				GAINS CONTROL		1.861.853.00
			4	1	4	6A				GAINS CONTROL		1.861.853.00
			4	1	4	6B				GAINS CONTROL		1.861.853.00
			4	1	4	6C				GAINS CONTROL		1.861.853.00
			4	1	4	27A				GAINS CONTROL		1.861.853.00
			4	1	4	27B				GAINS CONTROL		1.861.853.00
			4	1	4	27C				GAINS CONTROL		1.861.853.00
			4	1	4	28A				GAINS CONTROL		1.861.853.00
			4	1	4	28B				GAINS CONTROL		1.861.853.00
			4	1	4	28C				GAINS CONTROL		1.861.853.00
			4	1	5	5A				DAPRO INTERFACE		1.861.854.00
			4	1	5	5B				DAPRO INTERFACE		1.861.854.00
			4	1	5	5C				DAPRO INTERFACE		1.861.854.00
			4	1	5	6A				DAPRO INTERFACE		1.861.854.00
			4	1	5	6B				DAPRO INTERFACE		1.861.854.00
			4	1	5	6C				DAPRO INTERFACE		1.861.854.00
			4	1	5	27A				DAPRO INTERFACE		1.861.854.00
			4	1	5	27B				DAPRO INTERFACE		1.861.854.00
			4	1	5	27C				DAPRO INTERFACE		1.861.854.00
			4	1	5	28A				DAPRO INTERFACE		1.861.854.00
			4	1	5	28B				DAPRO INTERFACE		1.861.854.00
			4	1	5	28C				DAPRO INTERFACE		1.861.854.00
			4	1	6	5A				DATA PROCESSOR		1.861.855.00
			4	1	6	5B				DATA PROCESSOR		1.861.855.00
			4	1	6	5C				DATA PROCESSOR		1.861.855.00
			4	1	6	6A				DATA PROCESSOR		1.861.855.00
			4	1	6	6B				DATA PROCESSOR		1.861.855.00
			4	1	6	6C				DATA PROCESSOR		1.861.855.00
			4	1	6	27A				DATA PROCESSOR		1.861.855.00
			4	1	6	27B				DATA PROCESSOR		1.861.855.00
			4	1	6	27C				DATA PROCESSOR		1.861.855.00
			4	1	6	28A				DATA PROCESSOR		1.861.855.00
			4	1	6	28B				DATA PROCESSOR		1.861.855.00
			4	1	6	28C				DATA PROCESSOR		1.861.855.00
			4	1	7	5A				COEFFICIENT GENERATOR		1.861.856.00
			4	1	7	5B				COEFFICIENT GENERATOR		1.861.856.00
			4	1	7	5C				COEFFICIENT GENERATOR		1.861.856.00
			4	1	7	6A				COEFFICIENT GENERATOR		1.861.856.00
			4	1	7	6B				COEFFICIENT GENERATOR		1.861.856.00
			4	1	7	6C				COEFFICIENT GENERATOR		1.861.856.00
			4	1	7	27A				COEFFICIENT GENERATOR		1.861.856.00
			4	1	7	27B				COEFFICIENT GENERATOR		1.861.856.00
			4	1	7	27C				COEFFICIENT GENERATOR		1.861.856.00
			4	1	7	28A				COEFFICIENT GENERATOR		1.861.856.00
			4	1	7	28B				COEFFICIENT GENERATOR		1.861.856.00
			4	1	7	28C				COEFFICIENT GENERATOR		1.861.856.00
			4	1	8	5A				CODEC CONTROL		1.861.857.00
			4	1	8	5B				CODEC CONTROL		1.861.857.00
			4	1	8	5C				CODEC CONTROL		1.861.857.00
			4	1	8	6A				CODEC CONTROL		1.861.857.00
			4	1	8	6B				CODEC CONTROL		1.861.857.00

./.

WILLI STUDER AG * S I G N A L W I R E L I S T * 86/12/08 * 10:54 * P A G E 113

1.861.022.00 D820X PCM RECORDER * 86/08/27 - 00

SIGNAL NAME	COLOR	MI	ASY	GRP	ELM	PNT	S	LV	TYPE	DESCRIPTION OF ELEMENT	REMARK	ELEMENT NR.
<<— CONT.OF			4	1	8	6C				CODEC CONTROL		1.861.857.00
+5V-			4	1	8	27A				CODEC CONTROL		1.861.857.00
			4	1	8	27B				CODEC CONTROL		1.861.857.00
			4	1	8	27C				CODEC CONTROL		1.861.857.00
			4	1	8	28A				CODEC CONTROL		1.861.857.00
			4	1	8	28B				CODEC CONTROL		1.861.857.00
			4	1	8	28C				CODEC CONTROL		1.861.857.00
			4	1	9	5A				CODEC MEMORY		1.861.858.00
			4	1	9	5B				CODEC MEMORY		1.861.858.00
			4	1	9	5C				CODEC MEMORY		1.861.858.00
			4	1	9	6A				CODEC MEMORY		1.861.858.00
			4	1	9	6B				CODEC MEMORY		1.861.858.00
			4	1	9	6C				CODEC MEMORY		1.861.858.00
			4	1	9	27A				CODEC MEMORY		1.861.858.00
			4	1	9	27B				CODEC MEMORY		1.861.858.00
			4	1	9	27C				CODEC MEMORY		1.861.858.00
			4	1	9	28A				CODEC MEMORY		1.861.858.00
			4	1	9	28B				CODEC MEMORY		1.861.858.00
			4	1	9	28C				CODEC MEMORY		1.861.858.00
			4	1	10	5A				TRANSFORMATTER		1.861.859.00
			4	1	10	5B				TRANSFORMATTER		1.861.859.00
			4	1	10	5C				TRANSFORMATTER		1.861.859.00
			4	1	10	6A				TRANSFORMATTER		1.861.859.00
			4	1	10	6B				TRANSFORMATTER		1.861.859.00
			4	1	10	6C				TRANSFORMATTER		1.861.859.00
			4	1	10	27A				TRANSFORMATTER		1.861.859.00
			4	1	10	27B				TRANSFORMATTER		1.861.859.00
			4	1	10	27C				TRANSFORMATTER		1.861.859.00
			4	1	10	28A				TRANSFORMATTER		1.861.859.00
			4	1	10	28B				TRANSFORMATTER		1.861.859.00
			4	1	10	28C				TRANSFORMATTER		1.861.859.00
			4	1	11	5A				RUN PROCESSOR		1.861.860.00
			4	1	11	5B				RUN PROCESSOR		1.861.860.00
			4	1	11	5C				RUN PROCESSOR		1.861.860.00
			4	1	11	6A				RUN PROCESSOR		1.861.860.00
			4	1	11	6B				RUN PROCESSOR		1.861.860.00
			4	1	11	6C				RUN PROCESSOR		1.861.860.00
			4	1	11	27A				RUN PROCESSOR		1.861.860.00
			4	1	11	27B				RUN PROCESSOR		1.861.860.00
			4	1	11	27C				RUN PROCESSOR		1.861.860.00
			4	1	11	28A				RUN PROCESSOR		1.861.860.00
			4	1	11	28B				RUN PROCESSOR		1.861.860.00
			4	1	11	28C				RUN PROCESSOR		1.861.860.00
			4	1	12	5A				RT/TC CODEC		1.861.861.00
			4	1	12	5B				RT/TC CODEC		1.861.861.00
			4	1	12	5C				RT/TC CODEC		1.861.861.00
			4	1	12	6A				RT/TC CODEC		1.861.861.00
			4	1	12	6B				RT/TC CODEC		1.861.861.00
			4	1	12	6C				RT/TC CODEC		1.861.861.00
			4	1	12	27A				RT/TC CODEC		1.861.861.00
			4	1	12	27B				RT/TC CODEC		1.861.861.00
			4	1	12	27C				RT/TC CODEC		1.861.861.00
			4	1	12	28A				RT/TC CODEC		1.861.861.00
			4	1	12	28B				RT/TC CODEC		1.861.861.00

./.

PUBLISHED: 12/86

WILLI STUDER AG * S I G N A L W I R E L I S T * 86/12/08 * 10:54 * P A G E 114

1.861.022.00 D820X PCM RECORDER * 86/08/27 - 00

SIGNAL NAME	COLOR	MI	ASY	GRP	ELM	PNT	S	LV	TYPE	DESCRIPTION OF ELEMENT	REMARK	ELEMENT NR.
<<— CONT.OF			4	1	12	28C				RT/TC CODEC		1.861.861.00
+5V-			4	1	13	5A				TIMING + TEST		1.861.862.00
			4	1	13	5B				TIMING + TEST		1.861.862.00
			4	1	13	5C				TIMING + TEST		1.861.862.00
			4	1	13	6A				TIMING + TEST		1.861.862.00
			4	1	13	6B				TIMING + TEST		1.861.862.00
			4	1	13	6C				TIMING + TEST		1.861.862.00
			4	1	13	27A				TIMING + TEST		1.861.862.00
			4	1	13	27B				TIMING + TEST		1.861.862.00
			4	1	13	27C				TIMING + TEST		1.861.862.00
			4	1	13	28A				TIMING + TEST		1.861.862.00
			4	1	13	28B				TIMING + TEST		1.861.862.00
			4	1	13	28C				TIMING + TEST		1.861.862.00
			4	1	14	5A				SYSTEM CONTROLLER 1		1.861.763.00
			4	1	14	5B				SYSTEM CONTROLLER 1		1.861.763.00
			4	1	14	5C				SYSTEM CONTROLLER 1		1.861.763.00
			4	1	14	6A				SYSTEM CONTROLLER 1		1.861.763.00
			4	1	14	6B				SYSTEM CONTROLLER 1		1.861.763.00
			4	1	14	6C				SYSTEM CONTROLLER 1		1.861.763.00
			4	1	14	27A				SYSTEM CONTROLLER 1		1.861.763.00
			4	1	14	27B				SYSTEM CONTROLLER 1		1.861.763.00
			4	1	14	27C				SYSTEM CONTROLLER 1		1.861.763.00
			4	1	14	28A				SYSTEM CONTROLLER 1		1.861.763.00
			4	1	14	28B				SYSTEM CONTROLLER 1		1.861.763.00
			4	1	14	28C				SYSTEM CONTROLLER 1		1.861.763.00
			4	1	15	5A				SYSTEM CONTROLLER 2		1.861.763.00
			4	1	15	5B				SYSTEM CONTROLLER 2		1.861.763.00
			4	1	15	5C				SYSTEM CONTROLLER 2		1.861.763.00
			4	1	15	6A				SYSTEM CONTROLLER 2		1.861.763.00
			4	1	15	6B				SYSTEM CONTROLLER 2		1.861.763.00
			4	1	15	6C				SYSTEM CONTROLLER 2		1.861.763.00
			4	1	15	27A				SYSTEM CONTROLLER 2		1.861.763.00
			4	1	15	27B				SYSTEM CONTROLLER 2		1.861.763.00
			4	1	15	27C				SYSTEM CONTROLLER 2		1.861.763.00
			4	1	15	28A				SYSTEM CONTROLLER 2		1.861.763.00
			4	1	15	28B				SYSTEM CONTROLLER 2		1.861.763.00
			4	1	15	28C				SYSTEM CONTROLLER 2		1.861.763.00
			4	1	23	6A				POWER SUPPLY		1.861.515.00
			4	1	23	6B				POWER SUPPLY		1.861.515.00
			4	1	23	6C				POWER SUPPLY		1.861.515.00
			4	1	23	8A				POWER SUPPLY		1.861.515.00
			4	1	23	8B				POWER SUPPLY		1.861.515.00
			4	1	23	8C				POWER SUPPLY		1.861.515.00
			4	1	23	26A				POWER SUPPLY		1.861.515.00
			4	1	23	26B				POWER SUPPLY		1.861.515.00
			4	1	23	26C				POWER SUPPLY		1.861.515.00
			4	1	23	28A				POWER SUPPLY		1.861.515.00
			4	1	23	28B				POWER SUPPLY		1.861.515.00
			4	1	23	28C				POWER SUPPLY		1.861.515.00
-PSVTMOT	6		11	18	1	9			F	FROM GRP31, ELM01 J01		
	6		11	18	1	10			F	FROM GRP31, ELM01 J01		
	6		11	18	1	11			F	FROM GRP31, ELM01 J01		
	6		11	18	1	12			F	FROM GRP31, ELM01 J01		

./.

WILLI STUDER AG * S I G N A L W I R E L I S T * 86/12/08 * 10:54 * P A G E 115

1.861.022.00 D820X PCM RECORDER * 86/08/27 - 00

SIGNAL NAME	COLOR	MI	ASY	GRP	ELM	PNT	S	LV	TYPE	DESCRIPTION OF ELEMENT	REMARK	ELEMENT NR.
<<— CONT.OF	6		11	18	1	13			F	FROM GRP31, ELM01 J01		
-PSVTMOT	6		11	18	1	14			F	FROM GRP31, ELM01 J01		
	6		11	18	1	15			F	FROM GRP31, ELM01 J01		
	6		11	18	1	16			F	FROM GRP31, ELM01 J01		
	6		11	18	2	2			F	TO GRP33, ELM01 P01		
	6		11	18	2	5			F	TO GRP33, ELM01 P01		
	6		11	18	2	8			F	TO GRP33, ELM01 P01		
	6		11	18	2	11			F	TO GRP33, ELM01 P01		
	6		11	18	3	2			F	TO GRP30, ELM01 P02		
	6		11	18	3	5			F	TO GRP30, ELM01 P02		
	6		11	18	3	8			F	TO GRP30, ELM01 P02		
	6		11	18	3	11			F	TO GRP30, ELM01 P02		
			11	30	1	2			M	FROM GRP31, ELM01 J01		
			11	30	1	5			M	FROM GRP31, ELM01 J01		
			11	30	1	8			M	FROM GRP31, ELM01 J01		
			11	30	1	11			M	FROM GRP31, ELM01 J01		
			11	31	1	9			M	OUTPUT P01		
			11	31	1	10			M	OUTPUT P01		
			11	31	1	11			M	OUTPUT P01		
			11	31	1	12			M	OUTPUT P01		
			11	31	1	13			M	OUTPUT P01		
			11	31	1	14			M	OUTPUT P01		
			11	31	1	15			M	OUTPUT P01		
			11	31	1	16			M	OUTPUT P01		
			11	31	4	4			F	CONNECTOR TO CAPACITOR (GRP34) P03		
			11	31	4	5			F	CONNECTOR TO CAPACITOR (GRP34) P03		
			11	31	4	6			F	CONNECTOR TO CAPACITOR (GRP34) P03		
			11	33	1	2			M	FROM GRP31, ELM01 J01		
			11	33	1	5			M	FROM GRP31, ELM01 J01		
			11	33	1	8			M	FROM GRP31, ELM01 J01		
			11	33	1	11			M	FROM GRP31, ELM01 J01		
	6		11	34	1	2A			L	CAPACITOR		
	6		11	34	1	2B			L	CAPACITOR		
	6		11	34	1	2C			L	CAPACITOR		
	6		11	34	2	4			M	CONNECTOR (FROM GRP31) J01		
	6		11	34	2	5			M	CONNECTOR (FROM GRP31) J01		
	6		11	34	2	6			M	CONNECTOR (FROM GRP31) J01		
-STABIN	5		1	79	1	18				POWER CONNECTOR (24 PIN MOLEX FEM)		
	5		1	79	2	18				POWER CONNECTOR (24 PIN MOLEX MALE)		
	6		11	11	2	4			L	RECTIFIER DZ02		70.01.0231
	6		11	12	3	2			L	CAPACITOR C03		59.26.7103
	6		11	12	5	6			M	CONNECTOR TO GRP32, ELM01 P01		
			11	32	1	6			F	INPUT FROM GRP12, ELM05 J01		
-STABSNS	5		11	19	1	18			F	FROM GRP32, ELM02 J01		
	5		11	19	2	18			M	TO GRP21, ELM02 P01		
			11	20	14	5				FUSE FAILURE DETECTOR P14		
	5		11	20	62	5			U	WIRE FIELD		
	5		11	20	70	18			F	FROM GRP21, ELM01 J13		
			11	32	2	18			M	OUTPUT P01		
			11	59	1	5				FROM GRP20, ELM14 P01		
-VMOTLFT			11	33	3	2			J	P02		
	3		11	36	2	2				FROM GRP33, ELM 03		

PUBLISHED: 12/86

WILLI STUDER AG * S I G N A L W I R E L I S T * 86/12/08 * 10:54 * P A G E 116 *

* 1.861.022.00 D820X PCM RECORDER * 86/08/27 - 00 *

SIGNAL NAME	COLOR	MI	ASY	GRP	ELM	PNT	S	LV	TYPE	DESCRIPTION OF ELEMENT	REMARK	ELEMENT NR.
-VMOTRMT			11	30	3	2			J	P02		
	3		11	37	2	2				FROM GRP30. ELM 03		
-YSUP			11	20	5	10				SPOOLING MOTOR SUPPLY P05		
			11	20	43	11A				TAPE DECK PERIPHERY CONTR. J04		1.820.762.00
			11	31	3	10				FROM GRP20. ELM05 P02		
-10			2	1	4	14A				DETECTOR		1.861.804.00
			2	1	4	14B				DETECTOR		1.861.804.00
			2	1	4	14C				DETECTOR		1.861.804.00
			2	1	5	14A				WRITE AMPLIFIER		1.861.803.00
			2	1	5	14B				WRITE AMPLIFIER		1.861.803.00
			2	1	5	14C				WRITE AMPLIFIER		1.861.803.00
			2	1	6	14A				TAPE DECK MONITOR		1.861.802.00
			2	1	6	14B				TAPE DECK MONITOR		1.861.802.00
			2	1	6	14C				TAPE DECK MONITOR		1.861.802.00
			2	1	7	14A				PLAYBACK AMPLIFIER		1.861.801.00
			2	1	7	14B				PLAYBACK AMPLIFIER		1.861.801.00
			2	1	7	14C				PLAYBACK AMPLIFIER		1.861.801.00
			2	3	1	22				HEADBLOCK READ (P4) (D-SUB 25P)		1.861.801.00
			2	3	1	23				HEADBLOCK READ (P4) (D-SUB 25P)		1.861.801.00
			2	3	1	24				HEADBLOCK READ (P4) (D-SUB 25P)		1.861.801.00
			2	3	1	25				HEADBLOCK READ (P4) (D-SUB 25P)		1.861.801.00
			5	3	1	22				HEAD-AMPLIFIER CONNECTOR (D-SUB 25)		1.861.805.00
			5	3	1	23				HEAD-AMPLIFIER CONNECTOR (D-SUB 25)		1.861.805.00
			5	3	1	24				HEAD-AMPLIFIER CONNECTOR (D-SUB 25)		1.861.805.00
			5	3	1	25				HEAD-AMPLIFIER CONNECTOR (D-SUB 25)		1.861.805.00
-15.0	6		1	79	1	12				POWER CONNECTOR (24 PIN MOLEX FEM)		
	6		1	79	2	12				POWER CONNECTOR (24 PIN MOLEX MALE)		
			1	79	3	10				CAGE PWR CONNECTOR (25 PIN D-SUB)		
			1	79	3	11				CAGE PWR CONNECTOR (25 PIN D-SUB)		
			1	79	3	22				CAGE PWR CONNECTOR (25 PIN D-SUB)		
			1	79	3	23				CAGE PWR CONNECTOR (25 PIN D-SUB)		
			1	79	3	24				CAGE PWR CONNECTOR (25 PIN D-SUB)		
			1	79	4	10				POWER CONNECTOR RACK (25 PIN D-SUB)		
			1	79	4	11				POWER CONNECTOR RACK (25 PIN D-SUB)		
			1	79	4	22				POWER CONNECTOR RACK (25 PIN D-SUB)		
			1	79	4	23				POWER CONNECTOR RACK (25 PIN D-SUB)		
			1	80	1	14A				CUE/PQ DELAY		1.861.816.00
			1	80	1	14B				CUE/PQ DELAY		1.861.816.00
			1	80	1	14C				CUE/PQ DELAY		1.861.816.00
			1	80	2	14A				PDM MODULATOR		1.861.811.00
			1	80	2	14B				PDM MODULATOR		1.861.811.00
			1	80	2	14C				PDM MODULATOR		1.861.811.00
			1	80	3	14A				PDM DEMODULATOR 1		1.861.812.00
			1	80	3	14B				PDM DEMODULATOR 1		1.861.812.00
			1	80	3	14C				PDM DEMODULATOR 1		1.861.812.00
			1	80	4	14A				PDM DEMODULATOR 2		1.861.812.00
			1	80	4	14B				PDM DEMODULATOR 2		1.861.812.00
			1	80	4	14C				PDM DEMODULATOR 2		1.861.812.00
			1	80	5	14A				SPARE 1		1.861.815.00
			1	80	5	14B				SPARE 1		1.861.815.00
			1	80	5	14C				SPARE 1		1.861.815.00
			1	80	6	14A				ANALOG ROUTING		1.861.814.00

./.

WILLI STUDER AG * S I G N A L W I R E L I S T * 86/12/08 * 10:54 * P A G E 117 *

* 1.861.022.00 D820X PCM RECORDER * 86/08/27 - 00 *

SIGNAL NAME	COLOR	MI	ASY	GRP	ELM	PNT	S	LV	TYPE	DESCRIPTION OF ELEMENT	REMARK	ELEMENT NR.
<<-- CONT.OF			1	80	6	14B				ANALOG ROUTING		1.861.814.00
-15.0			1	80	6	14C				ANALOG ROUTING		1.861.814.00
			1	80	7	14A				PDM CONTROL		1.861.813.00
			1	80	7	14B				PDM CONTROL		1.861.813.00
			1	80	7	14C				PDM CONTROL		1.861.813.00
			1	80	8	14A				DISPLAY INTERFACE		1.861.817.00
			1	80	8	14B				DISPLAY INTERFACE		1.861.817.00
			1	80	8	14C				DISPLAY INTERFACE		1.861.817.00
			1	80	9	14A				SPARE 2		
			1	80	9	14B				SPARE 2		
			1	80	9	14C				SPARE 2		
			1	80	13	10				RACK PWR CONNECTOR (25 PIN D-SUB)		
			1	80	13	11				RACK PWR CONNECTOR (25 PIN D-SUB)		
			1	80	13	22				RACK PWR CONNECTOR (25 PIN D-SUB)		
			1	80	13	23				RACK PWR CONNECTOR (25 PIN D-SUB)		
	1		1	80	19	22				RACK-MONITOR PANEL (D-SUB CRIMP)		
	1		1	80	19	23				RACK-MONITOR PANEL (D-SUB CRIMP)		
	1		1	80	19	24				RACK-MONITOR PANEL (D-SUB CRIMP)		
			2	1	2	10				POWER DELTA MOLEX (P2) (D-SUB 25P)		1.861.895.00
			2	1	2	11				POWER DELTA MOLEX (P2) (D-SUB 25P)		1.861.895.00
			2	1	2	22				POWER DELTA MOLEX (P2) (D-SUB 25P)		1.861.895.00
			2	1	2	23				POWER DELTA MOLEX (P2) (D-SUB 25P)		1.861.895.00
			2	1	2	24				POWER DELTA MOLEX (P2) (D-SUB 25P)		1.861.895.00
			2	1	6	13A				TAPE DECK MONITOR		1.861.802.00
			2	1	6	13B				TAPE DECK MONITOR		1.861.802.00
			2	1	6	13C				TAPE DECK MONITOR		1.861.802.00
			2	1	7	13A				PLAYBACK AMPLIFIER		1.861.801.00
			2	1	7	13B				PLAYBACK AMPLIFIER		1.861.801.00
			2	1	7	13C				PLAYBACK AMPLIFIER		1.861.801.00
			3	3	1	22				CBUS REARPANEL RACK (D-SUB 25P M)		1.861.744.00
			3	3	1	23				CBUS REARPANEL RACK (D-SUB 25P M)		1.861.744.00
			3	3	1	24				CBUS REARPANEL RACK (D-SUB 25P M)		1.861.744.00
	6		11	19	1	12		F		FROM GRP32. ELM02 J01		
	6		11	19	2	12		M		TO GRP21. ELM02 P01		
			11	20	1	6				SPOOLING MOTOR DRIVE AMP. LEFT P01		
			11	20	2	6				SPOOLING MOTOR DRIVE AMP. RIGHT P02		
			11	20	3	6				CAPSTAN MOTOR DRIVE AMPLIFIER P03		
			11	20	4	6				PAR. CONT. INT. SYNCHRONIZER P04		
			11	20	5	6				SPOOLING MOTOR SUPPLY P05		
			11	20	6	6				EXT. SENSORS P06		
			11	20	9	6				TACHO SENSOR (SPOOLING M. LEFT) P09		
			11	20	10	6				TACHO SENSOR (SPOOLING M. RIGHT) P10		
			11	20	11	6				MOVE SENSOR P11		
			11	20	12	6				TAPE TENSION SENSOR. LEFT P12		
			11	20	13	6				TAPE TENSION SENSOR. RIGHT P13		
			11	20	14	13				FUSE FAILURE DETECTOR P14		
			11	20	17	6				TO HEAD BLOCK ASSEMBLY P17		
			11	20	18	6				VU-METER PANEL. EXTERNAL P18		
			11	20	19	6				SOURCE SELECTOR P19		
			11	20	40	22				SPOOLING MOTOR DRIVER J01		1.820.759.00
			11	20	41	22				CAPSTAN CONTROL UNIT J02		1.820.764.00
			11	20	42	18A				CAPSTAN INTERFACE J03		1.820.727.00
			11	20	42	18B				CAPSTAN INTERFACE J03		1.820.727.00
			11	20	43	18A				TAPE DECK PERIPHERY CONTR. J04		1.820.762.00

./.

PUBLISHED: 12/86

* WILLI STUDER AG * S I G N A L W I R E L I S T * 86/12/08 * 10:54 * P A G E 118 *

* 1.861.022.00 D820X PCM RECORDER * 86/08/27 - 00 *

SIGNAL NAME	COLOR	MI	ASY	GRP	ELM	PNT	S	LV	TYPE	DESCRIPTION OF ELEMENT	REMARK	ELEMENT NR.
<<— CONT.OF			11	20	43	18B				TAPE DECK PERIPHERY CONTR.	J04	1.820.762.00
-15.0			11	20	44	22				TAPE DECK COUNTER / TIMER	J05	1.820.761.00
			11	20	45	22				SPOOLING MOTOR CONTROLLER	J06	1.820.760.00
			11	20	47	22				TAPE DECK SERIAL INTERFACE	J08	1.820.763.00
			11	20	48	18A				MASTER SERIAL INTERFACE	J09	1.820.753.00
			11	20	48	18B				MASTER SERIAL INTERFACE	J09	1.820.753.00
			11	20	50	22				SMPTE/EBU INTERFACE	J11	1.820.751.00
	6		11	20	61	9		L		WIRE FIELD (FROM GRP20, ELM70)		
	6		11	20	70	12		F		FROM GRP21, ELM01	J13	
			11	30	2	6				FROM GRP20, ELM02	P01	
			11	31	3	6				FROM GRP20, ELM05	P02	
			11	32	2	12		M		OUTPUT	P01	
			11	33	2	6				FROM GRP20, ELM01	P01	
			11	36	1	6				TACHO SENSOR	P01	1.820.771.00
			11	37	1	6				TACHO SENSOR	P01	1.820.771.00
			11	39	1	6				FROM GRP20, ELM03	P01	
			11	39	2	5		M		TO GRP38, ELM01	P02	
			11	42	1	6				FROM GRP20, ELM12	P01	
			11	43	1	6				FROM GRP20, ELM13	P01	
			11	44	1	6				FROM GRP20, ELM06	P01	
			11	45	1	6				FROM GRP20, ELM11	P01	
			11	59	1	13				FROM GRP20, ELM14	P01	
-20			4	1	1	11A				ANALOG OUTPUT		1.861.751.00
			4	1	1	11B				ANALOG OUTPUT		1.861.751.00
			4	1	1	11C				ANALOG OUTPUT		1.861.751.00
			4	1	2	11A				ANALOG INPUT		1.861.752.00
			4	1	2	11B				ANALOG INPUT		1.861.752.00
			4	1	2	11C				ANALOG INPUT		1.861.752.00
			4	1	4	22A				GAINS CONTROL		1.861.853.00
			4	1	12	14A				RT/TC CODEC		1.861.861.00
			4	1	12	14B				RT/TC CODEC		1.861.861.00
			4	1	12	14C				RT/TC CODEC		1.861.861.00
			4	1	13	11A				TIMING + TEST		1.861.862.00
			4	1	13	11B				TIMING + TEST		1.861.862.00
			4	1	13	11C				TIMING + TEST		1.861.862.00
			4	1	14	29A				SYSTEM CONTROLLER 1		1.861.763.00
			4	1	15	29A				SYSTEM CONTROLLER 2		1.861.763.00
			4	1	23	18A				POWER SUPPLY		1.861.515.00
			4	1	23	18B				POWER SUPPLY		1.861.515.00
			4	1	23	18C				POWER SUPPLY		1.861.515.00
-26.0	9		1	79	1	19				POWER CONNECTOR (24 PIN MOLEX FEM)		
	9		1	79	2	19				POWER CONNECTOR (24 PIN MOLEX MALE)		
	9		11	19	1	19		F		FROM GRP32, ELM02	J01	
	9		11	19	2	19		M		TO GRP21, ELM02	P01	
			11	20	7	6				TAPE LIFT MOTOR, LEFT	P07	
			11	20	8	6				TAPE LIFT MOTOR, RIGHT	P08	
			11	20	14	16				FUSE FAILURE DETECTOR	P14	
	9		11	20	61	1		L		WIRE FIELD (FROM GRP20, ELM70)		
	9		11	20	70	19		F		FROM GRP21, ELM01	J13	
			11	32	2	19		M		OUTPUT	P01	
			11	46	1	6				FROM GRP20, ELM07	P01	
			11	47	1	6				FROM GRP20, ELM08	P01	
			11	59	1	16				FROM GRP20, ELM14	P01	

* WILLI STUDER AG * S I G N A L W I R E L I S T * 86/12/08 * 10:54 * P A G E 119 *

* 1.861.022.00 D820X PCM RECORDER * 86/08/27 - 00 *

SIGNAL NAME	COLOR	MI	ASY	GRP	ELM	PNT	S	LV	TYPE	DESCRIPTION OF ELEMENT	REMARK	ELEMENT NR.
ACPWE-A1	6		11	9	3	14			Y	SECONDARY 1		1.820.523.00
	6		11	10	1	1			L	FUSE	F01	53.03.0106
	6		11	11	4	1A			K	DISTRIBUTOR		52.01.0101
	6		11	11	4	1B			K	DISTRIBUTOR		52.01.0101
ACPWE-A2	6		11	9	3	13			Y	SECONDARY 1		1.820.523.00
	6		11	11	4	1D			K	DISTRIBUTOR		52.01.0101
ACPWE-A3	6		11	9	3	12			Y	SECONDARY 1		1.820.523.00
	6		11	11	4	1C			K	DISTRIBUTOR		52.01.0101
ACPWE-A4	1		11	9	3	11			Y	SECONDARY 1		1.820.523.00
	1		11	10	2	1			L	FUSE	F02	53.03.0106
	1		11	11	4	5A			K	DISTRIBUTOR		52.01.0101
	1		11	11	4	5B			K	DISTRIBUTOR		52.01.0101
ACPWE-A5	1		11	9	3	10			Y	SECONDARY 1		1.820.523.00
	1		11	11	4	5D			K	DISTRIBUTOR		52.01.0101
ACPWE-A6	7		11	9	3	9			Y	SECONDARY 1		1.820.523.00
	7		11	10	3	1			L	FUSE	F03	53.03.0106
ACPWE-B1	5		11	9	4	15			Y	SECONDARY 2		1.820.524.00
	5		11	11	1	2			L	RECTIFIER	DZ01	70.01.0231
	5		11	11	4	3A			K	DISTRIBUTOR		52.01.0101
	5		11	11	4	3C			K	DISTRIBUTOR		52.01.0101
	5		11	11	4	3D			K	DISTRIBUTOR		52.01.0101
	5		11	11	4	4B			K	DISTRIBUTOR		52.01.0101
	5		11	11	4	4C			K	DISTRIBUTOR		52.01.0101
	5		11	12	5	12			M	CONNECTER TO GRP32, ELM01	P01	
			11	32	1	12			F	INPUT FROM GRP12, ELM05	J01	
ACPWE-B2	5		11	9	4	16			Y	SECONDARY 2		1.820.524.00
	5		11	11	4	3B			K	DISTRIBUTOR		52.01.0101
ACPWE-B3	5		11	9	4	17			Y	SECONDARY 2		1.820.524.00
	5		11	11	4	4D			K	DISTRIBUTOR		52.01.0101
ACPWE-B4	4		11	9	4	18			Y	SECONDARY 2		1.820.524.00
	4		11	11	2	2			L	RECTIFIER	DZ02	70.01.0231
	4		11	11	4	6C			K	DISTRIBUTOR		52.01.0101
	4		11	11	4	6D			K	DISTRIBUTOR		52.01.0101
ACPWE-B5	4		11	9	4	19			Y	SECONDARY 2		1.820.524.00
	4		11	11	4	6A			K	DISTRIBUTOR		52.01.0101
ACPWE-B6	3		11	9	4	20			Y	SECONDARY 2		1.820.524.00
	3		11	11	3	2			L	RECTIFIER	DZ03	70.01.0231
ACPWE-C1	3		11	9	3	15			Y	SECONDARY 1		1.820.523.00
	3		11	9	4	14			Y	SECONDARY 2		1.820.524.00
ACPWE-C2	3		11	9	3	16			Y	SECONDARY 1		1.820.523.00
	3		11	9	4	13			Y	SECONDARY 2		1.820.524.00

PUBLISHED: 12/86

WILLI STUDER AG * S I G N A L W I R E L I S T * 86/12/08 * 10:54 * P A G E 120

1.861.022.00 D820X PCM RECORDER * 86/08/27 - 00

SIGNAL NAME	COLOR	MI	ASY	GRP	ELM	PNT	S	LV	TYPE	DESCRIPTION OF ELEMENT	REMARK	ELEMENT NR.
ACPWE-C3	3		11	9	3	17			Y	SECONDARY 1		1.820.523.00
	3		11	9	4	12			Y	SECONDARY 2		1.820.524.00
ACPWE-C4	3		11	9	3	18			Y	SECONDARY 1		1.820.523.00
	3		11	9	4	11			Y	SECONDARY 2		1.820.524.00
ACPWE-C5	3		11	9	3	19			Y	SECONDARY 1		1.820.523.00
	3		11	9	4	10			Y	SECONDARY 2		1.820.524.00
ACPWE-C6	3		11	9	3	20			Y	SECONDARY 1		1.820.523.00
	3		11	9	4	9			Y	SECONDARY 2		1.820.524.00
ACPWE-D1	9		11	10	1	2			L	FUSE F01		53.03.0106
	3		11	11	1	1			L	RECTIFIER DZ01		70.01.0231
	9		11	11	4	2A			K	DISTRIBUTOR		52.01.0101
	9		11	11	4	2B			K	DISTRIBUTOR		52.01.0101
	9		11	11	4	2C			K	DISTRIBUTOR		52.01.0101
	9		11	12	5	10			M	CONNECTOR TO GRP32, ELM01 P01		
			11	32	1	10			F	INPUT FROM GRP12, ELM05 J01		
ACPWE-D4	5		11	10	2	2			L	FUSE F02		53.03.0106
	5		11	11	2	1			L	RECTIFIER DZ02		70.01.0231
ACPWE-D6	3		11	10	3	2			L	FUSE F03		53.03.0106
	3		11	11	3	1			L	RECTIFIER DZ03		70.01.0231
ACPWM-A1	1		11	8	3	14			Y	SECONDARY 1		1.820.523.00
	1		11	8	5	1			M	CONNECTOR TO SPOOLING MOTOR SUPPLY		
			11	31	2	1			F	FROM GRP08, ELM05 J01		
ACPWM-A2	2		11	8	3	13			Y	SECONDARY 1		1.820.523.00
	2		11	8	5	2			M	CONNECTOR TO SPOOLING MOTOR SUPPLY		
			11	31	2	4			F	FROM GRP08, ELM05 J01		
ACPWM-A3	3		11	8	3	12			Y	SECONDARY 1		1.820.523.00
	3		11	8	5	3			M	CONNECTOR TO SPOOLING MOTOR SUPPLY		
			11	31	2	2			F	FROM GRP08, ELM05 J01		
ACPWM-A4	4		11	8	3	11			Y	SECONDARY 1		1.820.523.00
	4		11	8	5	4			M	CONNECTOR TO SPOOLING MOTOR SUPPLY		
			11	31	2	5			F	FROM GRP08, ELM05 J01		
ACPWM-A5	5		11	8	3	10			Y	SECONDARY 1		1.820.523.00
	5		11	8	5	5			M	CONNECTOR TO SPOOLING MOTOR SUPPLY		
			11	31	2	3			F	FROM GRP08, ELM05 J01		
ACPWM-A6	6		11	8	3	9			Y	SECONDARY 1		1.820.523.00
	6		11	8	5	6			M	CONNECTOR TO SPOOLING MOTOR SUPPLY		
			11	31	2	6			F	FROM GRP08, ELM05 J01		
ACPWM-B1	9		11	8	4	15			Y	SECONDARY 2		1.820.524.00
	9		11	8	5	7			F	CONNECTOR TO SPOOLING MOTOR SUPPLY		
			11	31	2	7			M	FROM GRP08, ELM05 J01		

WILLI STUDER AG * S I G N A L W I R E L I S T * 86/12/08 * 10:54 * P A G E 121

1.861.022.00 D820X PCM RECORDER * 86/08/27 - 00

SIGNAL NAME	COLOR	MI	ASY	GRP	ELM	PNT	S	LV	TYPE	DESCRIPTION OF ELEMENT	REMARK	ELEMENT NR.
ACPWM-B2	9		11	8	4	16			Y	SECONDARY 2		1.820.524.00
	9		11	8	5	8			F	CONNECTOR TO SPOOLING MOTOR SUPPLY		
			11	31	2	8			M	FROM GRP08, ELM05 J01		
ACPWM-B3	9		11	8	4	17			Y	SECONDARY 2		1.820.524.00
	9		11	8	5	9			F	CONNECTOR TO SPOOLING MOTOR SUPPLY		
			11	31	2	9			M	FROM GRP08, ELM05 J01		
ACPWM-B4	9		11	8	4	18			Y	SECONDARY 2		1.820.524.00
	9		11	8	5	10			F	CONNECTOR TO SPOOLING MOTOR SUPPLY		
			11	31	2	10			M	FROM GRP08, ELM05 J01		
ACPWM-B5	9		11	8	4	19			Y	SECONDARY 2		1.820.524.00
	9		11	8	5	11			F	CONNECTOR TO SPOOLING MOTOR SUPPLY		
			11	31	2	11			M	FROM GRP08, ELM05 J01		
ACPWM-B6	9		11	8	4	20			Y	SECONDARY 2		1.820.524.00
	9		11	8	5	12			F	CONNECTOR TO SPOOLING MOTOR SUPPLY		
			11	31	2	12			M	FROM GRP08, ELM05 J01		
ACPWM-C1	3		11	8	3	15			Y	SECONDARY 1		1.820.523.00
	3		11	8	4	14			Y	SECONDARY 2		1.820.524.00
ACPWM-C2	3		11	8	3	16			Y	SECONDARY 1		1.820.523.00
	3		11	8	4	13			Y	SECONDARY 2		1.820.524.00
ACPWM-C3	3		11	8	3	17			Y	SECONDARY 1		1.820.523.00
	3		11	8	4	12			Y	SECONDARY 2		1.820.524.00
ACPWM-C4	3		11	8	3	18			Y	SECONDARY 1		1.820.523.00
	3		11	8	4	11			Y	SECONDARY 2		1.820.524.00
ACPWM-C5	3		11	8	3	19			Y	SECONDARY 1		1.820.523.00
	3		11	8	4	10			Y	SECONDARY 2		1.820.524.00
ACPWM-C6	3		11	8	3	20			Y	SECONDARY 1		1.820.523.00
	3		11	8	4	9			Y	SECONDARY 2		1.820.524.00
ADBCLKA			4	1	2	7A				ANALOG INPUT		1.861.752.00
			4	1	5	15A				DAPRC INTERFACE		1.861.854.00
ADCCLIP1			4	1	2	25A				ANALOG INPUT		1.861.752.00
			4	1	4	24C				GAINS CONTROL		1.861.853.00
			4	1	6	22A				DATA PROCESSOR		1.861.855.00
			4	1	6	24B				DATA PROCESSOR		1.861.855.00
ADCCLIP2			4	1	2	25C				ANALOG INPUT		1.861.752.00
			4	1	4	25B				GAINS CONTROL		1.861.853.00
			4	1	6	22C				DATA PROCESSOR		1.861.855.00
			4	1	6	24C				DATA PROCESSOR		1.861.855.00
ADDAT1			4	1	2	30A				ANALOG INPUT		1.861.752.00
			4	1	5	16B				DAPRC INTERFACE		1.861.854.00
ADDAT2			4	1	2	29A				ANALOG INPUT		1.861.752.00
			4	1	5	17A				DAPRC INTERFACE		1.861.854.00

PUBLISHED: 12/86

WILLI STUDER AG * S I G N A L W I R E L I S T * 86/12/08 * 10:54 * P A G E 122
1.861.022.00 D820X PCM RECORDER * 86/08/27 - 00

SIGNAL NAME	COLOR	MI	ASY	GRP	ELM	PNT	S	LV	TYPE	DESCRIPTION OF ELEMENT		REMARK	ELEMENT NR.
ACIBCLKA			4	1	2	7C				ANALOG INPUT			1.861.752.00
			4	1	5	15B				DAPRC INTERFACE			1.861.854.00
ADIDAT1			4	1	2	30B				ANALOG INPUT			1.861.752.00
			4	1	5	16C				DAPRC INTERFACE			1.861.854.00
ADIDAT2			4	1	2	29B				ANALOG INPUT			1.861.752.00
			4	1	5	17B				DAPRC INTERFACE			1.861.854.00
ADISTART			4	1	2	8C				ANALOG INPUT			1.861.752.00
			4	1	5	16A				DAPRC INTERFACE			1.861.854.00
ADIVALID			4	1	2	31B				ANALOG INPUT			1.861.752.00
			4	1	5	14C				DAPRC INTERFACE			1.861.854.00
ADSTART			4	1	2	8A				ANALOG INPUT			1.861.752.00
			4	1	5	15C				DAPRO INTERFACE			1.861.854.00
ADTC			4	1	10	17A				TRANSFORMATTER			1.861.859.00
			4	1	11	17A				RUN PROCESSOR			1.861.860.00
ADT1			4	1	10	17C				TRANSFORMATTER			1.861.859.00
			4	1	11	17C				RUN PROCESSOR			1.861.860.00
ADT2			4	1	10	18A				TRANSFORMATTER			1.861.859.00
			4	1	11	18A				RUN PROCESSOR			1.861.860.00
ADT3			4	1	10	18C				TRANSFORMATTER			1.861.859.00
ADVALID			4	1	2	31A				ANALOG INPUT			1.861.752.00
			4	1	5	14B				DAPRC INTERFACE			1.861.854.00
AESGNDI			4	1	19	3				CONNECTOR 4	(TC+AES+BNC)		
			4	3	6	1				DIGITAL INPUT (DI)	(XLR)		
			4	3	23	2				DIGITAL I/O	(CIS)		1.861.775.00
AESGNDO			4	1	19	1				CONNECTOR 4	(TC+AES+BNC)		
			4	3	5	1				DIGITAL OUTPUT (DO)	(XLR)		
			4	3	23	5				DIGITAL I/O	(CIS)		1.861.775.00
AESIIN			4	1	4	14C				GAINS CONTROL			1.861.853.00
			4	1	5	13C				DAPRC INTERFACE			1.861.854.00
			4	1	5	24C				DAPRO INTERFACE			1.861.854.00
			4	1	13	15B				TIMING + TEST			1.861.862.00
			4	1	19	17				CONNECTOR 4	(TC+AES+BNC)		
			4	3	6	3				DIGITAL INPUT (DI)	(XLR)		
			4	3	23	4				DIGITAL I/O	(CIS)		1.861.775.00
AESIN			4	1	4	16B				GAINS CONTROL			1.861.853.00
			4	1	5	17C				DAPRO INTERFACE			1.861.854.00
			4	1	5	24B				DAPRO INTERFACE			1.861.854.00
			4	1	13	15A				TIMING + TEST			1.861.862.00
			4	1	19	16				CONNECTOR 4	(TC+AES+BNC)		
			4	3	6	2				DIGITAL INPUT (DI)	(XLR)		
			4	3	23	3				DIGITAL I/O	(CIS)		1.861.775.00

WILLI STUDER AG * S I G N A L W I R E L I S T * 86/12/08 * 10:54 * P A G E 123
1.861.022.00 D820X PCM RECORDER * 86/08/27 - 00

SIGNAL NAME	COLOR	MI	ASY	GRP	ELM	PNT	S	LV	TYPE	DESCRIPTION OF ELEMENT		REMARK	ELEMENT NR.
AESIO1			4	1	5	24A				DAPRC INTERFACE			1.861.854.00
			4	1	19	15				CONNECTOR 4	(TC+AES+BNC)		
			4	3	5	3				DIGITAL OUTPUT (DO)	(XLR)		
			4	3	23	7				DIGITAL I/O	(CIS)		1.861.775.00
AESO1			4	1	5	23C				DAPRC INTERFACE			1.861.854.00
			4	1	19	14				CONNECTOR 4	(TC+AES+BNC)		
			4	3	5	2				DIGITAL OUTPUT (DO)	(XLR)		
			4	3	23	6				DIGITAL I/O	(CIS)		1.861.775.00
AN-CSPDC			11	20	3	7				CAPSTAN MOTOR DRIVE AMPLIFIER	P03		
			11	20	42	3A				CAPSTAN INTERFACE	J03		1.870.727.00
			11	20	42	3B				CAPSTAN INTERFACE	J03		1.870.727.00
			11	39	1	7				FROM GRP20, ELM03	P01		
AN-ICL			11	20	40	26				SPOOLING MOTOR DRIVER	J01		1.820.759.00
			11	20	47	3				TAPE DECK SERIAL INTERFACE	J08		1.820.763.00
AN-ICLD			11	20	1	13				SPOOLING MOTOR DRIVE AMP. LEFT	P01		
			11	20	40	30				SPOOLING MOTOR DRIVER	J01		1.820.759.00
			11	33	2	13				FROM GRP20, ELM01	P01		
AN-ICR			11	20	40	1				SPOOLING MOTOR DRIVER	J01		1.820.759.00
			11	20	40	3				SPOOLING MOTOR DRIVER	J01		1.820.759.00
			11	20	47	4				TAPE DECK SERIAL INTERFACE	J08		1.820.763.00
AN-ICRD			11	20	2	13				SPOOLING MOTOR DRIVE AMP. RIGHT	P02		
			11	20	40	9				SPOOLING MOTOR DRIVER	J01		1.820.759.00
			11	30	2	13				FROM GRP20, ELM02	P01		
AN-IRL			11	20	40	27				SPOOLING MOTOR DRIVER	J01		1.820.759.00
			11	20	45	6				SPOOLING MOTOR CONTROLLER	J06		1.820.760.00
AN-IRR			11	20	40	2				SPOOLING MOTOR DRIVER	J01		1.820.759.00
			11	20	40	4				SPOOLING MOTOR DRIVER	J01		1.820.759.00
			11	20	45	8				SPOOLING MOTOR CONTROLLER	J06		1.820.760.00
AN-RES1			11	20	9	7				TACHO SENSOR (SPOOLING M. LEFT)	P09		
			11	20	47	7				TAPE DECK SERIAL INTERFACE	J08		1.820.763.00
			11	36	1	7				TACHO SENSOR	P01		1.820.771.00
AN-RES2			11	20	10	7				TACHO SENSOR (SPOOLING M. RIGHT)	P10		
			11	20	47	8				TAPE DECK SERIAL INTERFACE	J08		1.820.763.00
			11	37	1	7				TACHO SENSOR	P01		1.820.771.00
AN-RES3			11	20	11	7				MOVE SENSOR	P11		
			11	20	47	9				TAPE DECK SERIAL INTERFACE	J08		1.820.763.00
			11	45	1	7				FROM GRP20, ELM11	P01		
AN-RES4			11	20	47	10				TAPE DECK SERIAL INTERFACE	J08		1.820.763.00
AN-TTL			11	20	12	9				TAPE TENSION SENSOR, LEFT	P12		
			11	20	45	1				SPOOLING MOTOR CONTROLLER	J06		1.820.760.00
			11	20	45	3				SPOOLING MOTOR CONTROLLER	J06		1.820.760.00
			11	20	47	1				TAPE DECK SERIAL INTERFACE	J08		1.820.763.00

./.

PUBLISHED: 12/86

* WILLI STUDER AG * S I G N A L W I R E L I S T * 86/12/08 * 10:54 * P A G E 124 *

* 1.861.022.00 D820X PCM RECORDER * 86/08/27 - 00 *

SIGNAL NAME	COLOR	MI	ASY	GRP	ELM	PNT	S	LV	TYPE	DESCRIPTION OF ELEMENT		REMARK	ELEMENT NR.
<<— CONT.OF			11	20	47	5				TAPE DECK SERIAL INTERFACE	J08		1.820.763.00
AM-TTL			11	42	1	9				FROM GRP20, ELM12	P01		
AM-TTR			11	20	13	9				TAPE TENSION SENSOR, RIGHT	P13		
			11	20	45	2				SPOOLING MOTOR CONTROLLER	J06		1.820.760.00
			11	20	45	4				SPOOLING MOTOR CONTROLLER	J06		1.820.760.00
			11	20	47	2				TAPE DECK SERIAL INTERFACE	J08		1.820.763.00
			11	20	47	6				TAPE DECK SERIAL INTERFACE	J08		1.820.763.00
			11	43	1	9				FROM GRP20, ELM13	P01		
ANA-GND			4	1	1	13A				ANALOG OUTPUT			1.861.751.00
			4	1	1	13B				ANALOG OUTPUT			1.861.751.00
			4	1	1	13C				ANALOG OUTPUT			1.861.751.00
			4	1	1	19A				ANALOG OUTPUT			1.861.751.00
			4	1	1	19B				ANALOG OUTPUT			1.861.751.00
			4	1	1	19C				ANALOG OUTPUT			1.861.751.00
			4	1	1	20A				ANALOG OUTPUT			1.861.751.00
			4	1	2	13A				ANALOG INPUT			1.861.752.00
			4	1	2	13B				ANALOG INPUT			1.861.752.00
			4	1	2	13C				ANALOG INPUT			1.861.752.00
			4	1	2	19A				ANALOG INPUT			1.861.752.00
			4	1	2	19B				ANALOG INPUT			1.861.752.00
			4	1	2	19C				ANALOG INPUT			1.861.752.00
			4	1	12	15A				RT/TC CODEC			1.861.861.00
			4	1	12	15B				RT/TC CODEC			1.861.861.00
			4	1	12	15C				RT/TC CODEC			1.861.861.00
			4	1	16	1				CONNECTOR 1	(ANALOG I/O)		1.861.775.00
			4	1	16	3				CONNECTOR 1	(ANALOG I/O)		1.861.775.00
			4	1	16	5				CONNECTOR 1	(ANALOG I/O)		1.861.775.00
			4	1	16	7				CONNECTOR 1	(ANALOG I/O)		1.861.775.00
			4	1	16	9				CONNECTOR 1	(ANALOG I/O)		1.861.775.00
			4	1	16	11				CONNECTOR 1	(ANALOG I/O)		1.861.775.00
			4	1	16	13				CONNECTOR 1	(ANALOG I/O)		1.861.775.00
			4	1	23	20A				POWER SUPPLY			1.861.515.00
			4	1	23	20B				POWER SUPPLY			1.861.515.00
			4	1	23	20C				POWER SUPPLY			1.861.515.00
			4	1	23	24A				POWER SUPPLY			1.861.515.00
			4	1	23	24B				POWER SUPPLY			1.861.515.00
			4	1	23	24C				POWER SUPPLY			1.861.515.00
ANAIIN-1			4	1	2	15C				ANALOG INPUT			1.861.752.00
			4	1	16	25				CONNECTOR 1	(ANALOG I/O)		1.861.775.00
			4	2	4	3				CHANNEL 1 INPUT	(XLR)		1.861.775.00
			4	2	21	4				CHANNEL 1 I/O (CABLE)	(CIS)		
ANAIIN-2			4	1	2	17C				ANALOG INPUT			1.861.752.00
			4	1	16	23				CONNECTOR 1	(ANALOG I/O)		1.861.775.00
			4	2	2	3				CHANNEL 2 INPUT	(XLR)		1.861.775.00
			4	2	22	4				CHANNEL 2 I/O (CABLE)	(CIS)		
ANAIN-1			4	1	2	15A				ANALOG INPUT			1.861.752.00
			4	1	16	24				CONNECTOR 1	(ANALOG I/O)		1.861.775.00
			4	2	4	2				CHANNEL 1 INPUT	(XLR)		1.861.775.00
			4	2	21	3				CHANNEL 1 I/O (CABLE)	(CIS)		

* WILLI STUDER AG * S I G N A L W I R E L I S T * 86/12/08 * 10:54 * P A G E 125 *

* 1.861.022.00 D820X PCM RECORDER * 86/08/27 - 00 *

SIGNAL NAME	COLOR	MI	ASY	GRP	ELM	PNT	S	LV	TYPE	DESCRIPTION OF ELEMENT		REMARK	ELEMENT NR.
ANAIN-2			4	1	2	17A				ANALOG INPUT			1.861.752.00
			4	1	16	22				CONNECTOR 1	(ANALOG I/O)		1.861.775.00
			4	2	2	2				CHANNEL 2 INPUT	(XLR)		1.861.775.00
			4	2	22	3				CHANNEL 2 I/O (CABLE)	(CIS)		
ANAIOUT1			4	1	1	15C				ANALOG OUTPUT			1.861.751.00
			4	1	16	17				CONNECTOR 1	(ANALOG I/O)		1.861.775.00
			4	2	3	3				CHANNEL 1 OUTPUT	(XLR)		1.861.775.00
			4	2	21	7				CHANNEL 1 I/O (CABLE)	(CIS)		
ANAIOUT2			4	1	1	17C				ANALOG OUTPUT			1.861.751.00
			4	1	16	15				CONNECTOR 1	(ANALOG I/O)		1.861.775.00
			4	2	1	3				CHANNEL 2 OUTPUT	(XLR)		1.861.775.00
			4	2	22	7				CHANNEL 2 I/O (CABLE)	(CIS)		
ANAOUT-1			4	1	1	15A				ANALOG OUTPUT			1.861.751.00
			4	1	16	16				CONNECTOR 1	(ANALOG I/O)		1.861.775.00
			4	2	3	2				CHANNEL 1 OUTPUT	(XLR)		1.861.775.00
			4	2	21	6				CHANNEL 1 I/O (CABLE)	(CIS)		
ANAOUT-2			4	1	1	17A				ANALOG OUTPUT			1.861.751.00
			4	1	16	14				CONNECTOR 1	(ANALOG I/O)		1.861.775.00
			4	2	1	2				CHANNEL 2 OUTPUT	(XLR)		1.861.775.00
			4	2	22	6				CHANNEL 2 I/O (CABLE)	(CIS)		
ANM-SH1			11	48	1	26				FROM GRP50, ELM03			
			11	48	2	8				CONNECTOR EDIT ASSEMBLY			
			11	49	1	8				FROM GRP48, ELM02			
			11	50	3	26				CONNECTOR PUSHBUTTON ASSEMBLY	P02		
ANM-SH2			11	48	1	25				FROM GRP50, ELM03			
			11	48	2	10				CONNECTOR EDIT ASSEMBLY			
			11	49	1	10				FROM GRP48, ELM02			
			11	50	3	25				CONNECTOR PUSHBUTTON ASSEMBLY	P02		
ANM-SH3			11	48	1	24				FROM GRP50, ELM03			
			11	48	2	9				CONNECTOR EDIT ASSEMBLY			
			11	49	1	9				FROM GRP48, ELM02			
			11	50	3	24				CONNECTOR PUSHBUTTON ASSEMBLY	P02		
AUX3GND1	8		1	76	3	1				AUX 3 INPUT PLUG	(XLR FEMALE)		1.861.586.00
	8		1	76	4	9				CUE I/O	(CIS 10 FEMALE)		1.861.586.00
			1	80	1	5A				CUE/PQ DELAY			1.861.816.00
	4		1	80	16	18				RACK-CUE I/O	(25 PIN D-SUB)		
AUX3GND2	3		1	76	2	1				AUX 3 OUTPUT PLUG	(XLR MALE)		1.861.586.00
	8		1	76	4	6				CUE I/O	(CIS 10 FEMALE)		1.861.586.00
			1	80	6	7A				ANALOG ROUTING			1.861.814.00
	4		1	80	16	16				RACK-CUE I/O	(25 PIN D-SUB)		
AUX3IIN	6		1	76	3	3				AUX 3 INPUT PLUG	(XLR FEMALE)		1.861.586.00
	6		1	76	4	10				CUE I/O	(CIS 10 FEMALE)		1.861.586.00
			1	80	1	4C				CUE/PQ DELAY			1.861.816.00
	6		1	80	16	6				RACK-CUE I/O	(25 PIN D-SUB)		

PUBLISHED: 12/86

* WILLI STUDER AG * S I G N A L W I R E L I S T * 86/12/08 * 10:54 * P A G E 126 *

* 1.861.022.00 D820X PCM RECORDER * 86/08/27 - 00 *

SIGNAL NAME	COLOR	MI	ASY	GRP	ELM	PNT	S	LV	TYPE	DESCRIPTION OF ELEMENT	REMARK	ELEMENT NR.
AUX3IN	9		1	76	3	2				AUX 3 INPUT PLUG (XLR FEMALE)		1.861.586.00
	9		1	76	4	8				CUE I/O (CIS 10 FEMALE)		1.861.586.00
			1	80	1	4A				CUE/PC DELAY		1.861.816.00
	9		1	80	16	5				RACK-CUE I/O (25 PIN D-SUB)		
AUX3IOUT	6		1	76	2	3				AUX 3 OUTPUT PLUG (XLR MALE)		1.861.586.00
	6		1	76	4	7				CUE I/O (CIS 10 FEMALE)		1.861.586.00
			1	80	6	6C				ANALOG ROUTING		1.861.814.00
	6		1	80	16	4				RACK-CUE I/O (25 PIN D-SUB)		
AUX3OUT	9		1	76	2	2				AUX 3 OUTPUT PLUG (XLR MALE)		1.861.586.00
	9		1	76	4	5				CUE I/O (CIS 10 FEMALE)		1.861.586.00
			1	80	6	6A				ANALOG ROUTING		1.861.814.00
	9		1	80	16	3				RACK-CUE I/O (25 PIN D-SUB)		
AUX4GND0	8		1	76	1	1				AUX 4 OUTPUT PLUG (XLR MALE)		1.861.586.00
	8		1	76	4	2				CUE I/O (CIS 10 FEMALE)		1.861.586.00
			1	80	6	7C				ANALOG ROUTING		1.861.814.00
	4		1	80	16	14				RACK-CUE I/O (25 PIN D-SUB)		
AUX4IOUT	6		1	76	1	3				AUX 4 OUTPUT PLUG (XLR MALE)		1.861.586.00
	6		1	76	4	3				CUE I/O (CIS 10 FEMALE)		1.861.586.00
			1	80	6	8C				ANALOG ROUTING		1.861.814.00
	6		1	80	16	2				RACK-CUE I/O (25 PIN D-SUB)		
AUX4OUT	9		1	76	1	2				AUX 4 OUTPUT PLUG (XLR MALE)		1.861.586.00
	9		1	76	4	1				CUE I/O (CIS 10 FEMALE)		1.861.586.00
			1	80	6	8A				ANALOG ROUTING		1.861.814.00
	9		1	80	16	1				RACK-CUE I/O (25 PIN D-SUB)		
BLISYN			1	73	3	1				BOX-RACK 3 (CAGE) (25 PIN D-SUB)		1.861.583.00
			2	1	1	1				REARPANEL TO (BOX) (D-SUB 25P)		1.861.895.00
			2	1	5	20C				WRITE AMPLIFIER		1.861.803.00
			4	1	10	29C				TRANSFORMATTER		1.861.859.00
			4	1	18	1				CONNECTOR 3 (BACKPANEL RACK 3)		
			4	1	52	1				BOX-RACK 3 CONNECTOR (CABLE)		
BLSYN			1	73	3	14				BOX-RACK 3 (CAGE) (25 PIN D-SUB)		1.861.583.00
			2	1	1	14				REARPANEL TO (BOX) (D-SUB 25P)		1.861.895.00
			2	1	5	20A				WRITE AMPLIFIER		1.861.803.00
			4	1	10	29A				TRANSFORMATTER		1.861.859.00
			4	1	18	14				CONNECTOR 3 (BACKPANEL RACK 3)		
			4	1	52	14				BOX-RACK 3 CONNECTOR (CABLE)		
BM-0.2			11	48	1	6				FROM GRP50. ELM03		
			11	48	3	8				WIRE FIELD		
			11	50	3	6				CONNECTOR PUSHBUTTON ASSEMBLY P02		
BM-0.3			11	48	1	7				FROM GRP50. ELM03		
			11	48	3	7				WIRE FIELD		
			11	50	3	7				CONNECTOR PUSHBUTTON ASSEMBLY P02		
BM-0.4			11	48	1	8				FROM GRP50. ELM03		
			11	48	3	6				WIRE FIELD		
			11	50	3	8				CONNECTOR PUSHBUTTON ASSEMBLY P02		

* WILLI STUDER AG * S I G N A L W I R E L I S T * 86/12/08 * 10:54 * P A G E 127 *

* 1.861.022.00 D820X PCM RECORDER * 86/08/27 - 00 *

SIGNAL NAME	COLOR	MI	ASY	GRP	ELM	PNT	S	LV	TYPE	DESCRIPTION OF ELEMENT	REMARK	ELEMENT NR.
BM-0.5			11	48	1	9				FROM GRP50. ELM03		
			11	48	3	5				WIRE FIELD		
			11	50	3	9				CONNECTOR PUSHBUTTON ASSEMBLY P02		
BM-0.6			11	48	1	10				FROM GRP50. ELM03		
			11	48	3	4				WIRE FIELD		
			11	50	3	10				CONNECTOR PUSHBUTTON ASSEMBLY P02		
BM-0.7			11	48	1	11				FROM GRP50. ELM03		
			11	48	3	3				WIRE FIELD		
			11	50	3	11				CONNECTOR PUSHBUTTON ASSEMBLY P02		
BMCAUX			3	3	6	2				DATA MP KEYBOARD (FLATCABLE 26P)		1.861.746.00
			3	8	1	2				DATA MP AMPLIF (FLATCAB. SOLD. 26P)		1.861.745.00
BMCCH1			3	3	6	12				DATA MP KEYBOARD (FLATCABLE 26P)		1.861.746.00
			3	8	1	12				DATA MP AMPLIF (FLATCAB. SOLD. 26P)		1.861.745.00
BMCCH2			3	3	6	10				DATA MP KEYBOARD (FLATCABLE 26P)		1.861.746.00
			3	8	1	10				DATA MP AMPLIF (FLATCAB. SOLD. 26P)		1.861.745.00
BMCINP			3	3	6	16				DATA MP KEYBOARD (FLATCABLE 26P)		1.861.746.00
			3	8	1	16				DATA MP AMPLIF (FLATCAB. SOLD. 26P)		1.861.745.00
BMCMIX			3	3	6	6				DATA MP KEYBOARD (FLATCABLE 26P)		1.861.746.00
			3	8	1	6				DATA MP AMPLIF (FLATCAB. SOLD. 26P)		1.861.745.00
BMCTAP			3	3	6	14				DATA MP KEYBOARD (FLATCABLE 26P)		1.861.746.00
			3	8	1	14				DATA MP AMPLIF (FLATCAB. SOLD. 26P)		1.861.745.00
BMCUE1			3	3	6	8				DATA MP KEYBOARD (FLATCABLE 26P)		1.861.746.00
			3	8	1	8				DATA MP AMPLIF (FLATCAB. SOLD. 26P)		1.861.745.00
BMCUE2			3	3	6	4				DATA MP KEYBOARD (FLATCABLE 26P)		1.861.746.00
			3	8	1	4				DATA MP AMPLIF (FLATCAB. SOLD. 26P)		1.861.745.00
BR-FADAY			11	25	3	8			B	CONN. PARALLEL REMOTE CONTROL J03		
			11	27	4	15				TO CONN. PARALLEL REMOTE CONTR. P04		
BR-FORW			11	25	2	3			B	CONNECTOR SYNCHRONIZER J02		
			11	25	3	3			B	CONN. PARALLEL REMOTE CONTROL J03		
			11	27	3	5				TO CONNECTOR SYNCHRONIZER P03		
			11	27	4	5				TO CONN. PARALLEL REMOTE CONTR. P04		
BR-LOCST			11	25	3	7			B	CONN. PARALLEL REMOTE CONTROL J03		
			11	27	4	13				TO CONN. PARALLEL REMOTE CONTR. P04		
BR-PLAY			11	25	2	15			B	CONNECTOR SYNCHRONIZER J02		
			11	25	3	15			B	CONN. PARALLEL REMOTE CONTROL J03		
			11	27	3	4				TO CONNECTOR SYNCHRONIZER P03		
			11	27	4	4				TO CONN. PARALLEL REMOTE CONTR. P04		
BR-REC			11	25	2	9			B	CONNECTOR SYNCHRONIZER J02		
			11	25	3	9			B	CONN. PARALLEL REMOTE CONTROL J03		
			11	27	3	17				TO CONNECTOR SYNCHRONIZER P03		
			11	27	4	17				TO CONN. PARALLEL REMOTE CONTR. P04		

PUBLISHED: 12/86

WILLI STUDER AG * SIGNAL WIRE LIST * 86/12/08 * 10:54 * PAGE 128

1.861.022.00 D820X PCM RECORDER * 86/08/27 - 00

SIGNAL NAME	COLOR	MI	ASY	GRP	ELM	PNT	S	LV	TYPE	DESCRIPTION OF ELEMENT	REMARK	ELEMENT NR.
BR-REW			11	25	2	2			B	CONNECTOR SYNCHRONIZER J02		
			11	25	3	2			B	CONN. PARALLEL REMOTE CONTROL J03		
			11	27	3	3				TO CONNECTOR SYNCHRONIZER P03		
			11	27	4	3				TO CONN. PARALLEL REMOTE CONTR. P04		
BR-STOP			11	25	2	16			B	CONNECTOR SYNCHRONIZER J02		
			11	25	3	16			B	CONN. PARALLEL REMOTE CONTROL J03		
			11	27	3	6				TO CONNECTOR SYNCHRONIZER P03		
			11	27	4	6				TO CONN. PARALLEL REMOTE CONTR. P04		
BR-VRSPD			11	25	2	4			B	CONNECTOR SYNCHRONIZER J02		
			11	25	3	4			B	CONN. PARALLEL REMOTE CONTROL J03		
			11	27	3	7				TO CONNECTOR SYNCHRONIZER P03		
			11	27	4	7				TO CONN. PARALLEL REMOTE CONTR. P04		
BSYNCOUT			4	1	4	23B				GAINS CONTROL		1.861.853.00
			4	1	5	23B				DAPRO INTERFACE		1.861.854.00
CBUSAD			1	73	2	2C				BOX-RACK 2 (RACK) (25 PIN D-SUB)		1.861.583.00
			1	80	7	3A				PDM CONTROL		1.861.813.00
			1	80	8	3A				DISPLAY INTERFACE		1.861.817.00
			1	80	12	15				RACK-CAGE (25 PIN D-SUB)		
			1	80	15	20				BOX-RACK 2 TO REAR PANEL TD		1.861.583.00
			2	1	3	15				BACKPANEL RACK (D-SUB 25P)		1.861.895.00
			2	1	4	22A				DETECTOR		1.861.804.00
			4	1	1	23A				ANALOG OUTPUT		1.861.751.00
			4	1	2	23A				ANALOG INPUT		1.861.752.00
			4	1	3	18C				SPARE 1		
			4	1	4	18C				GAINS CONTROL		1.861.853.00
			4	1	8	18C				CODEC CONTROL		1.861.857.00
			4	1	12	18C				RT/TC CODEC		1.861.861.00
			4	1	13	18C				TIMING + TEST		1.861.862.00
			4	1	14	18C				SYSTEM CONTROLLER 1		1.861.763.00
			4	1	15	18C				SYSTEM CONTROLLER 2		1.861.763.00
			4	1	22	20				CONNECTOR 7 (BACKPANEL RACK 2)		
			4	1	51	20				BOX-RACK 2 CONNECTOR (CABLE)		
CBUSCLK			1	73	2	19				BOX-RACK 2 (RACK) (25 PIN D-SUB)		1.861.583.00
			1	80	7	2A				PDM CONTROL		1.861.813.00
			1	80	8	2A				DISPLAY INTERFACE		1.861.817.00
			1	80	12	16				RACK-CAGE (25 PIN D-SUB)		
			1	80	15	19				BOX-RACK 2 TO REAR PANEL TD		1.861.583.00
			2	1	3	16				BACKPANEL RACK (D-SUB 25P)		1.861.895.00
			2	1	4	21A				DETECTOR		1.861.804.00
			4	1	1	22A				ANALOG OUTPUT		1.861.751.00
			4	1	2	22A				ANALOG INPUT		1.861.752.00
			4	1	3	18A				SPARE 1		
			4	1	4	18A				GAINS CONTROL		1.861.853.00
			4	1	8	18A				CODEC CONTROL		1.861.857.00
			4	1	12	18A				RT/TC CODEC		1.861.861.00
			4	1	13	18A				TIMING + TEST		1.861.862.00
			4	1	14	18A				SYSTEM CONTROLLER 1		1.861.763.00
			4	1	15	18A				SYSTEM CONTROLLER 2		1.861.763.00
			4	1	22	19				CONNECTOR 7 (BACKPANEL RACK 2)		
			4	1	51	19				BOX-RACK 2 CONNECTOR (CABLE)		

WILLI STUDER AG * SIGNAL WIRE LIST * 86/12/08 * 10:54 * PAGE 129

1.861.022.00 D820X PCM RECORDER * 86/08/27 - 00

SIGNAL NAME	COLOR	MI	ASY	GRP	ELM	PNT	S	LV	TYPE	DESCRIPTION OF ELEMENT	REMARK	ELEMENT NR.
CBUSDAT			1	73	2	21				BOX-RACK 2 (RACK) (25 PIN D-SUB)		1.861.583.00
			1	80	7	4A				PDM CONTROL		1.861.813.00
			1	80	8	4A				DISPLAY INTERFACE		1.861.817.00
			1	80	12	14				RACK-CAGE (25 PIN D-SUB)		
			1	80	15	21				BOX-RACK 2 TO REAR PANEL TD		1.861.583.00
			2	1	3	14				BACKPANEL RACK (D-SUB 25P)		1.861.895.00
			2	1	4	23A				DETECTOR		1.861.804.00
			4	1	1	24A				ANALOG OUTPUT		1.861.751.00
			4	1	2	24A				ANALOG INPUT		1.861.752.00
			4	1	3	19B				SPARE 1		
			4	1	4	19B				GAINS CONTROL		1.861.853.00
			4	1	8	19B				CODEC CONTROL		1.861.857.00
			4	1	12	19B				RT/TC CODEC		1.861.861.00
			4	1	13	19B				TIMING + TEST		1.861.862.00
			4	1	14	19B				SYSTEM CONTROLLER 1		1.861.763.00
			4	1	15	19B				SYSTEM CONTROLLER 2		1.861.763.00
			4	1	22	21				CONNECTOR 7 (BACKPANEL RACK 2)		
			4	1	51	21				BOX-RACK 2 CONNECTOR (CABLE)		
CBUSIAD			1	73	2	7				BOX-RACK 2 (RACK) (25 PIN D-SUB)		1.861.583.00
			1	80	7	3C				PDM CONTROL		1.861.813.00
			1	80	8	3C				DISPLAY INTERFACE		1.861.817.00
			1	80	12	2				RACK-CAGE (25 PIN D-SUB)		
			1	80	15	7				BOX-RACK 2 TO REAR PANEL TD		1.861.583.00
			2	1	3	2				BACKPANEL RACK (D-SUB 25P)		1.861.895.00
			2	1	4	22C				DETECTOR		1.861.804.00
			4	1	1	23B				ANALOG OUTPUT		1.861.751.00
			4	1	2	23B				ANALOG INPUT		1.861.752.00
			4	1	3	19A				SPARE 1		
			4	1	4	19A				GAINS CONTROL		1.861.853.00
			4	1	8	19A				CODEC CONTROL		1.861.857.00
			4	1	12	19A				RT/TC CODEC		1.861.861.00
			4	1	13	19A				TIMING + TEST		1.861.862.00
			4	1	14	19A				SYSTEM CONTROLLER 1		1.861.763.00
			4	1	15	19A				SYSTEM CONTROLLER 2		1.861.763.00
			4	1	22	7				CONNECTOR 7 (BACKPANEL RACK 2)		
			4	1	51	7				BOX-RACK 2 CONNECTOR (CABLE)		
CBUSICLK			1	73	2	6				BOX-RACK 2 (RACK) (25 PIN D-SUB)		1.861.583.00
			1	80	7	2C				PDM CONTROL		1.861.813.00
			1	80	8	2C				DISPLAY INTERFACE		1.861.817.00
			1	80	12	3				RACK-CAGE (25 PIN D-SUB)		
			1	80	15	6				BOX-RACK 2 TO REAR PANEL TD		1.861.583.00
			2	1	3	3				BACKPANEL RACK (D-SUB 25P)		1.861.895.00
			2	1	4	21C				DETECTOR		1.861.804.00
			4	1	1	22B				ANALOG OUTPUT		1.861.751.00
			4	1	2	22B				ANALOG INPUT		1.861.752.00
			4	1	3	18B				SPARE 1		
			4	1	4	18B				GAINS CONTROL		1.861.853.00
			4	1	8	18B				CODEC CONTROL		1.861.857.00
			4	1	12	18B				RT/TC CODEC		1.861.861.00
			4	1	13	18B				TIMING + TEST		1.861.862.00
			4	1	14	18B				SYSTEM CONTROLLER 1		1.861.763.00
			4	1	15	18B				SYSTEM CONTROLLER 2		1.861.763.00
			4	1	22	6				CONNECTOR 7 (BACKPANEL RACK 2)		
			4	1	51	6				BOX-RACK 2 CONNECTOR (CABLE)		

PUBLISHED: 12/86

* WILLI STUDER AG * S I G N A L W I R E L I S T * 86/12/08 * 10:54 * P A G E 130 *

* 1.861.022.00 D820X PCM RECORDER * 86/08/27 - 00 *

SIGNAL NAME	COLOR	MI	ASY	GRP	ELM	PNT	S	LV	TYPE	DESCRIPTION OF ELEMENT	REMARK	ELEMENT NR.
CBUSIDAT			1	73	2	8				BOX-RACK 2 (RACK) (25 PIN D-SUB)		1.861.583.00
			1	8C	7	4C				PDM CONTROL		1.861.813.00
			1	8C	8	4C				DISPLAY INTERFACE		1.861.817.00
			1	8D	12	1				RACK-CAGE (25 PIN D-SUB)		
			1	8D	15	8				BOX-RACK 2 TO REAR PANEL TD		1.861.583.00
			2	1	3	1				BACKPANEL RACK (D-SUB 25P)		1.861.895.00
			2	1	4	23C				DETECTOR		1.861.804.00
			4	1	1	24B				ANALOG OUTPUT		1.861.751.00
			4	1	2	24B				ANALOG INPUT		1.861.752.00
			4	1	3	19C				SPARE 1		
			4	1	4	19C				GAINS CONTROL		1.861.853.00
			4	1	8	19C				CODEC CONTROL		1.861.857.00
			4	1	12	19C				RT/TC CODEC		1.861.861.00
			4	1	13	19C				TIMING + TEST		1.861.862.00
			4	1	14	19C				SYSTEM CONTROLLER 1		1.861.763.00
			4	1	15	19C				SYSTEM CONTROLLER 2		1.861.763.00
			4	1	22	8				CONNECTOR 7 (BACKPANEL RACK 2)		
			4	1	51	8				BOX-RACK 2 CONNECTOR (CABLE)		
CCADDRDE			4	1	8	20B				CODEC CONTROL		1.861.857.00
			4	1	9	20B				CODEC MEMORY		1.861.858.00
CCADEC			4	1	8	11B				CODEC CONTROL		1.861.857.00
			4	1	9	11B				CODEC MEMORY		1.861.858.00
CCAH1			4	1	8	9A				CODEC CONTROL		1.861.857.00
			4	1	9	9A				CODEC MEMORY		1.861.858.00
CCAH2			4	1	8	9B				CODEC CONTROL		1.861.857.00
			4	1	9	9B				CODEC MEMORY		1.861.858.00
CCAH3			4	1	8	9C				CODEC CONTROL		1.861.857.00
			4	1	9	9C				CODEC MEMORY		1.861.858.00
CCAH4			4	1	8	10A				CODEC CONTROL		1.861.857.00
			4	1	9	10A				CODEC MEMORY		1.861.858.00
CCAH5			4	1	8	10B				CODEC CONTROL		1.861.857.00
			4	1	9	10B				CODEC MEMORY		1.861.858.00
CCAH6			4	1	8	10C				CODEC CONTROL		1.861.857.00
			4	1	9	10C				CODEC MEMORY		1.861.858.00
CCAH7			4	1	8	11A				CODEC CONTROL		1.861.857.00
			4	1	9	11A				CODEC MEMORY		1.861.858.00
CCALO			4	1	8	4A				CODEC CONTROL		1.861.857.00
			4	1	9	4A				CODEC MEMORY		1.861.858.00
CCAL1			4	1	8	4B				CODEC CONTROL		1.861.857.00
			4	1	9	4B				CODEC MEMORY		1.861.858.00
CCAL2			4	1	8	4C				CODEC CONTROL		1.861.857.00
			4	1	9	4C				CODEC MEMORY		1.861.858.00

* WILLI STUDER AG * S I G N A L W I R E L I S T * 86/12/08 * 10:54 * P A G E 131 *

* 1.861.022.00 D820X PCM RECORDER * 86/08/27 - 00 *

SIGNAL NAME	COLOR	MI	ASY	GRP	ELM	PNT	S	LV	TYPE	DESCRIPTION OF ELEMENT	REMARK	ELEMENT NR.
CCAL3			4	1	8	7A				CODEC CONTROL		1.861.857.00
			4	1	9	7A				CODEC MEMORY		1.861.858.00
CCAL4			4	1	8	7B				CODEC CONTROL		1.861.857.00
			4	1	9	7B				CODEC MEMORY		1.861.858.00
CCAL5			4	1	8	7C				CODEC CONTROL		1.861.857.00
			4	1	9	7C				CODEC MEMORY		1.861.858.00
CCAL6			4	1	8	8A				CODEC CONTROL		1.861.857.00
			4	1	9	8A				CODEC MEMORY		1.861.858.00
CCAL7			4	1	8	8B				CODEC CONTROL		1.861.857.00
			4	1	9	8B				CODEC MEMORY		1.861.858.00
CCBLCRC			4	1	8	29C				CODEC CONTROL		1.861.857.00
			4	1	9	29C				CODEC MEMORY		1.861.858.00
CCCRC			4	1	8	16C				CODEC CONTROL		1.861.857.00
			4	1	9	16C				CODEC MEMORY		1.861.858.00
CCECO			4	1	8	15B				CODEC CONTROL		1.861.857.00
			4	1	9	15B				CODEC MEMORY		1.861.858.00
CCEEO			4	1	8	29A				CODEC CONTROL		1.861.857.00
			4	1	9	29A				CODEC MEMORY		1.861.858.00
CCEE1			4	1	8	29B				CODEC CONTROL		1.861.857.00
			4	1	9	29B				CODEC MEMORY		1.861.858.00
CCENCIN			4	1	8	20C				CODEC CONTROL		1.861.857.00
			4	1	9	20C				CODEC MEMORY		1.861.858.00
CCEO			4	1	8	15A				CODEC CONTROL		1.861.857.00
			4	1	9	15A				CODEC MEMORY		1.861.858.00
CCE1			4	1	8	14C				CODEC CONTROL		1.861.857.00
			4	1	9	14C				CODEC MEMORY		1.861.858.00
CCFBCLR			4	1	8	21A				CODEC CONTROL		1.861.857.00
			4	1	9	21A				CODEC MEMORY		1.861.858.00
CCIDIS			4	1	8	23A				CODEC CONTROL		1.861.857.00
			4	1	9	23B				CODEC MEMORY		1.861.858.00
CCIGMASK			4	1	8	24A				CODEC CONTROL		1.861.857.00
			4	1	9	17B				CODEC MEMORY		1.861.858.00
CCILV			4	1	8	15C				CODEC CONTROL		1.861.857.00
			4	1	9	15C				CODEC MEMORY		1.861.858.00
CCIPRSPL			4	1	8	24B				CODEC CONTROL		1.861.857.00
			4	1	9	24C				CODEC MEMORY		1.861.858.00
CCIR5			4	1	8	8C				CODEC CONTROL		1.861.857.00
			4	1	9	8C				CODEC MEMORY		1.861.858.00

PUBLISHED: 12/86

WILLI STUDER AG * S I G N A L W I R E L I S T * 86/12/08 * 10:54 * P A G E 132

1.861.022.JC D820X PCM RECORDER * 86/08/27 - 00

SIGNAL NAME	COLOR	MI	ASY	GRP	ELM	PNT	S	LV	TYPE	DESCRIPTION OF ELEMENT	REMARK	ELEMENT NR.
CCK5			4	1	8	22A				CODEC CONTROL		1.861.857.00
			4	1	9	22A				CODEC MEMORY		1.861.858.00
CCPR-1			4	1	8	11C				CODEC CONTROL		1.861.857.00
			4	1	9	11C				CODEC MEMORY		1.861.858.00
CCQECD			4	1	8	16A				CODEC CONTROL		1.861.857.00
			4	1	9	16A				CODEC MEMORY		1.861.858.00
CCQECDM			4	1	8	16B				CODEC CONTROL		1.861.857.00
			4	1	9	16B				CODEC MEMORY		1.861.858.00
CCRDERR			4	1	8	26B				CODEC CONTROL		1.861.857.00
			4	1	9	26B				CODEC MEMORY		1.861.858.00
CCREPRO			4	1	8	20A				CODEC CONTROL		1.861.857.00
			4	1	9	20A				CODEC MEMORY		1.861.858.00
CCWDERR			4	1	8	21C				CODEC CONTROL		1.861.857.00
			4	1	9	21C				CODEC MEMORY		1.861.858.00
CCWRERR			4	1	8	26C				CODEC CONTROL		1.861.857.00
			4	1	9	26C				CODEC MEMORY		1.861.858.00
CC0			4	1	8	12A				CODEC CONTROL		1.861.857.00
			4	1	9	12A				CODEC MEMORY		1.861.858.00
CC1			4	1	8	12B				CODEC CONTROL		1.861.857.00
			4	1	9	12B				CODEC MEMORY		1.861.858.00
CC2			4	1	8	12C				CODEC CONTROL		1.861.857.00
			4	1	9	12C				CODEC MEMORY		1.861.858.00
CC3			4	1	8	13A				CODEC CONTROL		1.861.857.00
			4	1	9	13A				CODEC MEMORY		1.861.858.00
CC4			4	1	8	13B				CODEC CONTROL		1.861.857.00
			4	1	9	13B				CODEC MEMORY		1.861.858.00
CC5			4	1	8	13C				CODEC CONTROL		1.861.857.00
			4	1	9	13C				CODEC MEMORY		1.861.858.00
CC6			4	1	8	14A				CODEC CONTROL		1.861.857.00
			4	1	9	14A				CODEC MEMORY		1.861.858.00
CC7			4	1	8	14B				CODEC CONTROL		1.861.857.00
			4	1	9	14B				CODEC MEMORY		1.861.858.00
CHAESB			4	1	4	7B				GAINS CONTROL		1.861.853.00
			4	1	5	8B				DAPRC INTERFACE		1.861.854.00
CHASEL1			1	80	6	29A				ANALOG ROUTING		1.861.814.00
			1	80	7	29C				PDM CONTROL		1.861.813.00
CHASEL2			1	80	6	29C				ANALOG ROUTING		1.861.814.00
			1	80	7	29A				PDM CONTROL		1.861.813.00

WILLI STUDER AG * S I G N A L W I R E L I S T * 86/12/08 * 10:54 * P A G E 133

1.861.022.00 D820X PCM RECORDER * 86/08/27 - 00

SIGNAL NAME	COLOR	MI	ASY	GRP	ELM	PNT	S	LV	TYPE	DESCRIPTION OF ELEMENT	REMARK	ELEMENT NR.
CLK1			4	1	10	25A				TRANSFORMATTER		1.861.859.00
			4	1	11	24A				RUN PROCESSOR		1.861.860.00
			4	1	13	24A				TIMING + TEST		1.861.862.00
CLK4			4	1	4	25A				GAINS CONTROL		1.861.853.00
			4	1	5	25A				DAPRO INTERFACE		1.861.854.00
			4	1	6	25A				DATA PROCESSOR		1.861.855.00
			4	1	7	25A				COEFFICIENT GENERATOR		1.861.856.00
			4	1	10	25B				TRANSFORMATTER		1.861.859.00
			4	1	13	24B				TIMING + TEST		1.861.862.00
CLK5			4	1	5	25B				DAPRC INTERFACE		1.861.854.00
			4	1	7	25B				COEFFICIENT GENERATOR		1.861.856.00
			4	1	8	21B				CODEC CONTROL		1.861.857.00
			4	1	10	25C				TRANSFORMATTER		1.861.859.00
			4	1	12	12B				RT/TC CODEC		1.861.861.00
			4	1	13	24C				TIMING + TEST		1.861.862.00
CLK6			4	1	8	25A				CODEC CONTROL		1.861.857.00
			4	1	9	25A				CODEC MEMORY		1.861.858.00
			4	1	10	26A				TRANSFORMATTER		1.861.859.00
			4	1	11	25A				RUN PROCESSOR		1.861.860.00
			4	1	13	25A				TIMING + TEST		1.861.862.00
CLK7			4	1	8	25B				CODEC CONTROL		1.861.857.00
			4	1	9	25B				CODEC MEMORY		1.861.858.00
			4	1	13	25B				TIMING + TEST		1.861.862.00
CLK8			4	1	8	25C				CODEC CONTROL		1.861.857.00
			4	1	9	25C				CODEC MEMORY		1.861.858.00
			4	1	13	25C				TIMING + TEST		1.861.862.00
CLK9			4	1	8	26A				CODEC CONTROL		1.861.857.00
			4	1	9	26A				CODEC MEMORY		1.861.858.00
			4	1	13	26A				TIMING + TEST		1.861.862.00
CODE			3	3	2	1				AUDIO SPEAKER RIGHT (CIS 3P) J3		1.861.746.00
			3	3	3	2				AUDIO SPEAKER LEFT (CIS 5P) J4		1.861.746.00
			3	3	4	1				AUDIO PHONES PLUG (CIS 6P) J2		1.861.746.00
			3	3	4	3				AUDIO PHONES PLUG (CIS 6P) J2		1.861.746.00
			3	3	5	4				TO TANDEM POT (CIS 6P) J1		1.912.001.30
CPHASE-R	2		11	38	1	1			F	FROM GRP39, ELM02 J01		
	2		11	38	4	1			L	STATOR (WIRE FIELD)		
			11	39	2	1			M	TO GRP38, ELM01 P02		
CPHASE-S	3		11	38	1	3			F	FROM GRP39, ELM02 J01		
	0		11	38	4	2			L	STATOR (WIRE FIELD)		
			11	39	2	3			M	TO GRP38, ELM01 P02		
CPHASE-T	9		11	38	1	2			F	FROM GRP39, ELM02 J01		
	9		11	38	4	3			L	STATOR (WIRE FIELD)		
			11	39	2	2			M	TO GRP38, ELM01 P02		
CC			2	1	4	29B				DETECTOR		1.861.8C4.00
			2	1	7	29B				PLAYBACK AMPLIFIER		1.861.8C1.00

PUBLISHED: 12/86

WILLI STUDER AG * S I G N A L W I R E L I S T * 86/12/08 * 10:54 * P A G E 134

1.861.022.00 D820X PCM RECORDER * 86/08/27 - 00

SIGNAL NAME	COLOR	MI	ASY	GRP	ELM	PNT	S	LV	TYPE	DESCRIPTION OF ELEMENT	REMARK	ELEMENT NR.
C1			2	1	4	28B				DETECTOR		1.861.804.C0
			2	1	7	28B				PLAYBACK AMPLIFIER		1.861.801.C0
C2			2	1	4	27B				DETECTOR		1.861.804.C0
			2	1	7	27B				PLAYBACK AMPLIFIER		1.861.801.C0
C3			2	1	4	26B				DETECTOR		1.861.804.C0
			2	1	7	26B				PLAYBACK AMPLIFIER		1.861.801.00
D-WRITE			3	1	2	19				DATA OP KEYBOARD (FLATCABLE 26P)		1.861.742.C0
			3	9	1	19				DATA OP PROC (FLATCAB. SOLD. 26P.)		1.861.741.C0
DABCDA1			4	1	1	7A				ANALOG OUTPUT		1.861.751.C0
			4	1	5	11C				DAPRO INTERFACE		1.861.854.00
DACOUT1			1	73	1	1				BOX-RACK 1 (RACK) (25 PIN D-SUB)		1.861.583.C0
			1	80	6	2A				ANALOG ROUTING		1.861.814.C0
			1	80	14	1				BOX-RACK 1 TO REAR PANEL TO		
			4	1	1	14B				ANALOG OUTPUT		1.861.751.00
			4	1	17	1				CONNECTOR 2 (BACKPANEL RACK 1)		
			4	1	50	1				BOX-RACK 1 CONNECTOR (CABLE)		
DACOUT2			1	73	1	2				BOX-RACK 1 (RACK) (25 PIN D-SUB)		1.861.583.00
			1	80	6	3A				ANALOG ROUTING		1.861.814.C0
			1	80	14	2				BOX-RACK 1 TO REAR PANEL TO		
			4	1	1	18B				ANALOG OUTPUT		1.861.751.00
			4	1	17	2				CONNECTOR 2 (BACKPANEL RACK 1)		
			4	1	50	2				BOX-RACK 1 CONNECTOR (CABLE)		
DADAT11			4	1	1	30A				ANALOG OUTPUT		1.861.751.C0
			4	1	5	12B				DAPRO INTERFACE		1.861.854.C0
DADAT21			4	1	1	29A				ANALOG OUTPUT		1.861.751.C0
			4	1	5	13A				DAPRO INTERFACE		1.861.854.C0
DAIBCDA1			4	1	1	7B				ANALOG OUTPUT		1.861.751.C0
			4	1	5	12A				DAPRO INTERFACE		1.861.854.C0
DAICAT11			4	1	1	3CB				ANALOG OUTPUT		1.861.751.C0
			4	1	5	12C				DAPRO INTERFACE		1.861.854.00
DAIDAT21			4	1	1	29B				ANALOG OUTPUT		1.861.751.C0
			4	1	5	13B				DAPRO INTERFACE		1.861.854.C0
DAIVAL1A			4	1	1	31B				ANALOG OUTPUT		1.861.751.C0
			4	1	5	11B				DAPRO INTERFACE		1.861.854.C0
DAI96FS			4	1	1	10B				ANALOG OUTPUT		1.861.751.C0
			4	1	5	10B				DAPRO INTERFACE		1.861.854.C0
DAVAL1A			4	1	1	31A				ANALOG OUTPUT		1.861.751.C0
			4	1	5	11A				DAPRO INTERFACE		1.861.854.00
DA96FS			4	1	1	10A				ANALOG OUTPUT		1.861.751.C0
			4	1	5	10A				DAPRO INTERFACE		1.861.854.C0

WILLI STUDER AG * S I G N A L W I R E L I S T * 86/12/08 * 10:54 * P A G E 135

1.861.022.00 D820X PCM RECORDER * 86/08/27 - 00

SIGNAL NAME	COLOR	MI	ASY	GRP	ELM	PNT	S	LV	TYPE	DESCRIPTION OF ELEMENT	REMARK	ELEMENT NR.
DCDAPDEC			4	1	7	22C				COEFFICIENT GENERATOR		1.861.856.C0
			4	1	9	22C				CODEC MEMORY		1.861.858.00
DCD1CLK			4	1	7	19A				COEFFICIENT GENERATOR		1.861.856.C0
			4	1	8	17A				CODEC CONTROL		1.861.857.00
DCD2CLK			4	1	7	19B				COEFFICIENT GENERATOR		1.861.856.C0
			4	1	8	17B				CODEC CONTROL		1.861.857.00
DCENCDAP			4	1	5	22B				DAPRO INTERFACE		1.861.854.C0
			4	1	9	22B				CODEC MEMORY		1.861.858.C0
DCFMUT			4	1	6	23B				DATA PROCESSOR		1.861.855.C0
			4	1	8	23B				CODEC CONTROL		1.861.857.00
DCFSPL			4	1	6	23C				DATA PROCESSOR		1.861.855.C0
			4	1	8	23C				CODEC CONTROL		1.861.857.C0
DCIDAVAL			4	1	5	19C				DAPRO INTERFACE		1.861.854.C0
			4	1	9	17C				CODEC MEMORY		1.861.858.C0
DCINIT			4	1	4	29C				GAINS CONTROL		1.861.853.C0
			4	1	6	29A				DATA PROCESSOR		1.861.855.C0
			4	1	8	17C				CODEC CONTROL		1.861.857.C0
DCINVAL			4	1	6	23A				DATA PROCESSOR		1.861.855.C0
			4	1	9	23A				CODEC MEMORY		1.861.858.00
DDATAAES			4	1	4	15A				GAINS CONTROL		1.861.853.00
			4	1	5	9A				DAPRO INTERFACE		1.861.854.C0
DDBCLK			4	1	4	7A				GAINS CONTROL		1.861.853.00
			4	1	5	8A				DAPRO INTERFACE		1.861.854.C0
DDBSYNIN			4	1	4	7C				GAINS CONTROL		1.861.853.C0
			4	1	5	8C				DAPRO INTERFACE		1.861.854.C0
DDB1D14			4	1	6	14C				DATA PROCESSOR		1.861.855.C0
			4	1	7	14C				COEFFICIENT GENERATOR		1.861.856.00
DDB2D13			4	1	6	15A				DATA PROCESSOR		1.861.855.00
			4	1	7	15A				COEFFICIENT GENERATOR		1.861.856.00
DDB2D14			4	1	6	15B				DATA PROCESSOR		1.861.855.C0
			4	1	7	15B				COEFFICIENT GENERATOR		1.861.856.00
DDB2D15			4	1	6	15C				DATA PROCESSOR		1.861.855.00
			4	1	7	15C				COEFFICIENT GENERATOR		1.861.856.00
DDCHPRO			4	1	4	14A				GAINS CONTROL		1.861.853.00
			4	1	5	4C				DAPRO INTERFACE		1.861.854.00
			4	1	5	14A				DAPRO INTERFACE		1.861.854.00
			4	1	6	14A				DATA PROCESSOR		1.861.855.00
			4	1	7	14A				COEFFICIENT GENERATOR		1.861.856.00
			4	1	13	4C				TIMING + TEST		1.861.862.00

PUBLISHED: 12/86

WILLI STUDER AG * S I G N A L W I R E L I S T * 86/12/08 * 10:54 * P A G E 136

1.861.022.00 D820X PCM RECORDER * 86/08/27 - 00

SIGNAL NAME	COLOR	MI	ASY	GRP	ELM	PNT	S	LV	TYPE	DESCRIPTION OF ELEMENT	REMARK	ELEMENT NR.
DDCHSTAT			4	1	4	15C				GAINS CONTROL		1.861.853.00
			4	1	5	9C				DAPRC INTERFACE		1.861.854.00
DDCK2AES			4	1	4	15B				GAINS CONTROL		1.861.853.00
			4	1	5	9B				DAPRC INTERFACE		1.861.854.00
DDCLKG1			4	1	4	8C				GAINS CONTROL		1.861.853.00
			4	1	7	8C				COEFFICIENT GENERATOR		1.861.856.00
DDCLRO			4	1	6	16B				DATA PROCESSOR		1.861.855.00
			4	1	7	16B				COEFFICIENT GENERATOR		1.861.856.00
DDC3			4	1	4	16C				GAINS CONTROL		1.861.853.00
			4	1	6	16C				DATA PROCESSOR		1.861.855.00
DDDATAG1			4	1	4	8B				GAINS CONTROL		1.861.853.00
			4	1	7	8B				COEFFICIENT GENERATOR		1.861.856.00
DDFADD0			4	1	4	4B				GAINS CONTROL		1.861.853.00
			4	1	5	7B				DAPRC INTERFACE		1.861.854.00
DDFADD1			4	1	4	4A				GAINS CONTROL		1.861.853.00
			4	1	5	7A				DAPRC INTERFACE		1.861.854.00
DDFGA1			4	1	6	14B				DATA PROCESSOR		1.861.855.00
			4	1	7	14B				COEFFICIENT GENERATOR		1.861.856.00
DDGRDY1			4	1	4	10A				GAINS CONTROL		1.861.853.00
			4	1	7	10A				COEFFICIENT GENERATOR		1.861.856.00
DDMPOFF			4	1	4	17C				GAINS CONTROL		1.861.853.00
			4	1	6	17C				DATA PROCESSOR		1.861.855.00
DDIDIGNU			4	1	1	12B				ANALOG OUTPUT		1.861.751.00
			4	1	4	20A				GAINS CONTROL		1.861.853.00
DDIFVAL			4	1	4	4C				GAINS CONTROL		1.861.853.00
			4	1	5	7C				DAPRC INTERFACE		1.861.854.00
DDISTART			4	1	5	10C				DAPRC INTERFACE		1.861.854.00
			4	1	6	10C				DATA PROCESSOR		1.861.855.00
DDLCLK1			4	1	4	9A				GAINS CONTROL		1.861.853.00
			4	1	7	9A				COEFFICIENT GENERATOR		1.861.856.00
DDLCLK10			4	1	4	17A				GAINS CONTROL		1.861.853.00
			4	1	5	18A				DAPRC INTERFACE		1.861.854.00
			4	1	6	18A				DATA PROCESSOR		1.861.855.00
DDLCLK11			4	1	4	17B				GAINS CONTROL		1.861.853.00
			4	1	5	18B				DAPRC INTERFACE		1.861.854.00
			4	1	6	18B				DATA PROCESSOR		1.861.855.00
DDMIEN1			4	1	6	16A				DATA PROCESSOR		1.861.855.00
			4	1	7	16A				COEFFICIENT GENERATOR		1.861.856.00

WILLI STUDER AG * S I G N A L W I R E L I S T * 86/12/08 * 10:54 * P A G E 137

1.861.022.00 D820X PCM RECORDER * 86/08/27 - 00

SIGNAL NAME	COLOR	MI	ASY	GRP	ELM	PNT	S	LV	TYPE	DESCRIPTION OF ELEMENT	REMARK	ELEMENT NR.
DDMUTE			4	1	4	21A				GAINS CONTROL		1.861.853.00
			4	1	6	21A				DATA PROCESSOR		1.861.855.00
DDPROA0			4	1	4	11A				GAINS CONTROL		1.861.853.00
			4	1	6	11A				DATA PROCESSOR		1.861.855.00
			4	1	7	11A				COEFFICIENT GENERATOR		1.861.856.00
DDPROA1			4	1	4	11B				GAINS CONTROL		1.861.853.00
			4	1	6	11B				DATA PROCESSOR		1.861.855.00
			4	1	7	11B				COEFFICIENT GENERATOR		1.861.856.00
DDPROA2			4	1	4	11C				GAINS CONTROL		1.861.853.00
			4	1	6	11C				DATA PROCESSOR		1.861.855.00
			4	1	7	11C				COEFFICIENT GENERATOR		1.861.856.00
DDPROA3			4	1	4	12A				GAINS CONTROL		1.861.853.00
			4	1	6	12A				DATA PROCESSOR		1.861.855.00
			4	1	7	12A				COEFFICIENT GENERATOR		1.861.856.00
DDPROA4			4	1	4	12B				GAINS CONTROL		1.861.853.00
			4	1	6	12B				DATA PROCESSOR		1.861.855.00
			4	1	7	12B				COEFFICIENT GENERATOR		1.861.856.00
DDPROA5			4	1	4	12C				GAINS CONTROL		1.861.853.00
			4	1	6	12C				DATA PROCESSOR		1.861.855.00
			4	1	7	12C				COEFFICIENT GENERATOR		1.861.856.00
DDPROA6			4	1	4	13A				GAINS CONTROL		1.861.853.00
			4	1	6	13A				DATA PROCESSOR		1.861.855.00
			4	1	7	13A				COEFFICIENT GENERATOR		1.861.856.00
DDPROA7			4	1	4	13B				GAINS CONTROL		1.861.853.00
			4	1	6	13B				DATA PROCESSOR		1.861.855.00
			4	1	7	13B				COEFFICIENT GENERATOR		1.861.856.00
DDPROA8			4	1	4	13C				GAINS CONTROL		1.861.853.00
			4	1	6	13C				DATA PROCESSOR		1.861.855.00
			4	1	7	13C				COEFFICIENT GENERATOR		1.861.856.00
DDPROA9			4	1	4	10B				GAINS CONTROL		1.861.853.00
			4	1	6	10B				DATA PROCESSOR		1.861.855.00
			4	1	7	10B				COEFFICIENT GENERATOR		1.861.856.00
DD3HEAD			4	1	6	9C				DATA PROCESSOR		1.861.855.00
			4	1	7	9C				COEFFICIENT GENERATOR		1.861.856.00
DINT			4	1	10	20A				TRANSFORMATTER		1.861.859.00
			4	1	11	20A				RUN PROCESSOR		1.861.860.00
DITHER			4	1	2	9A				ANALOG INPUT		1.861.752.00
DPC3AD			1	74	1	2				RACK-CCP/DP (25-PIN D-SUB)		1.861.000.00
			1	80	8	21C				DISPLAY INTERFACE		1.861.817.00
			1	80	18	2				DISPLAY PANEL/CCP (25 PIN D-SUB)		
			1	80	19	2				RACK-MONITOR PANEL (D-SUB CRIMP)		

./.

PUBLISHED: 12/86

WILLI STUDER AG * SIGNAL WIRE LIST * 86/12/08 * 10:54 * PAGE 138

1.861.022.00 D820X PCM RECORDER * 86/08/27 - 00

SIGNAL NAME	COLOR	MI	ASY	GRP	ELM	PNT	S	LV	TYPE	DESCRIPTION OF ELEMENT	REMARK	ELEMENT NR.
<<-- CONT.OF DPCBAD			3	1	1	2				CBUS CCP TRANSCEIVER (D-SUB 25P F)	0	1.861.742.00
			3	2	1	2				BUS REARPANEL TD (D-SUB 25P M)		1.861.744.00
			3	2	2	2				CBUS DP PROCESSOR (D-SUB 25P F)		1.861.744.00
			3	3	1	2				CBUS REARPANEL RACK (D-SUB 25P M)		1.861.744.00
DPCBCLK			1	74	1	1				RACK-CCP/DP (25-PIN D-SUB)		1.861.000.00
			1	80	8	22C				DISPLAY INTERFACE		1.861.817.00
			1	80	18	1				DISPLAY PANEL/CCP (25 PIN D-SUB)		
	2		1	80	19	1				RACK-MONITOR PANEL (D-SUB CRIMP)		
			3	1	1	1				CBUS CCP TRANSCEIVER (D-SUB 25P F)	0	1.861.742.00
			3	2	1	1				BUS REARPANEL TD (D-SUB 25P M)		1.861.744.00
			3	2	2	1				CBUS DP PROCESSOR (D-SUB 25P F)		1.861.744.00
			3	3	1	1				CBUS REARPANEL RACK (D-SUB 25P M)		1.861.744.00
DPCBDAT			1	74	1	3				RACK-CCP/DP (25-PIN D-SUB)		1.861.000.00
			1	80	8	20C				DISPLAY INTERFACE		1.861.817.00
			1	80	18	3				DISPLAY PANEL/CCP (25 PIN D-SUB)		
	3		1	80	19	3				RACK-MONITOR PANEL (D-SUB CRIMP)		
			3	1	1	3				CBUS CCP TRANSCEIVER (D-SUB 25P F)	0	1.861.742.00
			3	2	1	3				BUS REARPANEL TD (D-SUB 25P M)		1.861.744.00
			3	2	2	3				CBUS DP PROCESSOR (D-SUB 25P F)		1.861.744.00
			3	3	1	3				CBUS REARPANEL RACK (D-SUB 25P M)		1.861.744.00
DPCBIAD			1	74	1	15				RACK-CCP/DP (25-PIN D-SUB)		1.861.000.00
			1	80	8	21A				DISPLAY INTERFACE		1.861.817.00
			1	80	18	15				DISPLAY PANEL/CCP (25 PIN D-SUB)		
	9		1	80	19	15				RACK-MONITOR PANEL (D-SUB CRIMP)		
			3	1	1	15				CBUS CCP TRANSCEIVER (D-SUB 25P F)	0	1.861.742.00
			3	2	1	15				BUS REARPANEL TD (D-SUB 25P M)		1.861.744.00
			3	2	2	15				CBUS DP PROCESSOR (D-SUB 25P F)		1.861.744.00
			3	3	1	15				CBUS REARPANEL RACK (D-SUB 25P M)		1.861.744.00
DPCBICLK			1	74	1	14				RACK-CCP/DP (25-PIN D-SUB)		1.861.000.00
			1	80	8	22A				DISPLAY INTERFACE		1.861.817.00
			1	80	18	14				DISPLAY PANEL/CCP (25 PIN D-SUB)		
	4		1	80	19	14				RACK-MONITOR PANEL (D-SUB CRIMP)		
			3	1	1	14				CBUS CCP TRANSCEIVER (D-SUB 25P F)	0	1.861.742.00
			3	2	1	14				BUS REARPANEL TD (D-SUB 25P M)		1.861.744.00
			3	2	2	14				CBUS DP PROCESSOR (D-SUB 25P F)		1.861.744.00
			3	3	1	14				CBUS REARPANEL RACK (D-SUB 25P M)		1.861.744.00
DPCBIDAT			1	74	1	16				RACK-CCP/DP (25-PIN D-SUB)		1.861.000.00
			1	80	8	20A				DISPLAY INTERFACE		1.861.817.00
			1	80	18	16				DISPLAY PANEL/CCP (25 PIN D-SUB)		
	5		1	80	19	16				RACK-MONITOR PANEL (D-SUB CRIMP)		
			3	1	1	16				CBUS CCP TRANSCEIVER (D-SUB 25P F)	0	1.861.742.00
			3	2	1	16				BUS REARPANEL TD (D-SUB 25P M)		1.861.744.00
			3	2	2	16				CBUS DP PROCESSOR (D-SUB 25P F)		1.861.744.00
			3	3	1	16				CBUS REARPANEL RACK (D-SUB 25P M)		1.861.744.00
DPD0			3	1	2	1				DATA DP KEYBOARD (FLATCABLE 26P)		1.861.742.00
			3	9	1	1				DATA DP PROC (FLATCAB. SOLD. 26P.)		1.861.741.00
DPD1			3	1	2	3				DATA DP KEYBOARD (FLATCABLE 26P)		1.861.742.00
			3	9	1	3				DATA DP PROC (FLATCAB. SOLD. 26P.)		1.861.741.00

WILLI STUDER AG * SIGNAL WIRE LIST * 86/12/08 * 10:54 * PAGE 139

1.861.022.00 D820X PCM RECORDER * 86/08/27 - 00

SIGNAL NAME	COLOR	MI	ASY	GRP	ELM	PNT	S	LV	TYPE	DESCRIPTION OF ELEMENT	REMARK	ELEMENT NR.
DPD2			3	1	2	5				DATA DP KEYBOARD (FLATCABLE 26P)		1.861.742.00
			3	9	1	5				DATA DP PROC (FLATCAB. SOLD. 26P.)		1.861.741.00
DPD3			3	1	2	7				DATA DP KEYBOARD (FLATCABLE 26P)		1.861.742.00
			3	9	1	7				DATA DP PROC (FLATCAB. SOLD. 26P.)		1.861.741.00
DPD4			3	1	2	9				DATA DP KEYBOARD (FLATCABLE 26P)		1.861.742.00
			3	9	1	9				DATA DP PROC (FLATCAB. SOLD. 26P.)		1.861.741.00
DPD5			3	1	2	11				DATA DP KEYBOARD (FLATCABLE 26P)		1.861.742.00
			3	9	1	11				DATA DP PROC (FLATCAB. SOLD. 26P.)		1.861.741.00
DPD6			3	1	2	13				DATA DP KEYBOARD (FLATCABLE 26P)		1.861.742.00
			3	9	1	13				DATA DP PROC (FLATCAB. SOLD. 26P.)		1.861.741.00
DPD7			3	1	2	15				DATA DP KEYBOARD (FLATCABLE 26P)		1.861.742.00
			3	9	1	15				DATA DP PROC (FLATCAB. SOLD. 26P.)		1.861.741.00
DPKEYS			3	1	2	17				DATA DP KEYBOARD (FLATCABLE 26P)		1.861.742.00
			3	9	1	17				DATA DP PROC (FLATCAB. SOLD. 26P.)		1.861.741.00
DPMODE			3	1	2	21				DATA DP KEYBOARD (FLATCABLE 26P)		1.861.742.00
			3	9	1	21				DATA DP PROC (FLATCAB. SOLD. 26P.)		1.861.741.00
DPO			1	80	1	20C				CUE/PC DELAY		1.861.816.00
			1	80	2	20A				PDM MODULATOR		1.861.811.00
DP1			1	80	1	20A				CUE/PC DELAY		1.861.816.00
			1	80	2	20C				PDM MODULATOR		1.861.811.00
DP10			1	80	1	25C				CUE/PC DELAY		1.861.816.00
			1	80	2	25A				PDM MODULATOR		1.861.811.00
DP11			1	80	1	25A				CUE/PC DELAY		1.861.816.00
			1	80	2	25C				PDM MODULATOR		1.861.811.00
DP12			1	80	1	26C				CUE/PC DELAY		1.861.816.00
			1	80	2	26A				PDM MODULATOR		1.861.811.00
DP13			1	80	1	26A				CUE/PC DELAY		1.861.816.00
			1	80	2	26C				PDM MODULATOR		1.861.811.00
DP14			1	80	1	27C				CUE/PC DELAY		1.861.816.00
			1	80	2	27A				PDM MODULATOR		1.861.811.00
DP15			1	80	1	27A				CUE/PC DELAY		1.861.816.00
			1	80	2	27C				PDM MODULATOR		1.861.811.00
DP2			1	80	1	21C				CUE/PC DELAY		1.861.816.00
			1	80	2	21A				PDM MODULATOR		1.861.811.00
DP3			1	80	1	21A				CUE/PC DELAY		1.861.816.00
			1	80	2	21C				PDM MODULATOR		1.861.811.00
DP4			1	80	1	22C				CUE/PC DELAY		1.861.816.00
			1	80	2	22A				PDM MODULATOR		1.861.811.00

PUBLISHED: 12/86

* WILLI STUDER AG * S I G N A L W I R E L I S T * 86/12/08 * 10:54 * P A G E 140 *

* 1.861.022.00 D820X PCM RECORDER * 86/08/27 - 00 *

SIGNAL NAME	COLOR	MI	ASY	GRP	ELM	PNT	S	LV	TYPE	DESCRIPTION OF ELEMENT	REMARK	ELEMENT NR.
DP5			1	80	1	22A				CUE/PC DELAY		1.861.816.00
			1	80	2	22C				PDM MODULATOR		1.861.811.00
DP6			1	80	1	23C				CUE/PC DELAY		1.861.816.00
			1	80	2	23A				PDM MODULATOR		1.861.811.00
DP7			1	80	1	23A				CUE/PC DELAY		1.861.816.00
			1	80	2	23C				PDM MODULATOR		1.861.811.00
DP8			1	80	1	24C				CUE/PC DELAY		1.861.816.00
			1	80	2	24A				PDM MODULATOR		1.861.811.00
DP9			1	80	1	24A				CUE/PC DELAY		1.861.816.00
			1	80	2	24C				PDM MODULATOR		1.861.811.00
DSPA-0			1	70	1	15				SIGNAL QUALITY (26-PIN FLATCABLE)		1.861.731.00
			1	80	7	6A				PDM CONTROL		1.861.813.00
			1	80	17	8				SIGNAL QUALITY DISPL.(25 PIN D-SUB)		
DSPA-1			1	70	1	16				SIGNAL QUALITY (26-PIN FLATCABLE)		1.861.731.00
			1	80	7	6C				PDM CONTROL		1.861.813.00
			1	80	17	21				SIGNAL QUALITY DISPL.(25 PIN D-SUB)		
DSPA-2			1	70	1	17				SIGNAL QUALITY (26-PIN FLATCABLE)		1.861.731.00
			1	80	7	7A				PDM CONTROL		1.861.813.00
			1	80	17	9				SIGNAL QUALITY DISPL.(25 PIN D-SUB)		
DSPA-3			1	70	1	18				SIGNAL QUALITY (26-PIN FLATCABLE)		1.861.731.00
			1	80	7	7C				PDM CONTROL		1.861.813.00
			1	80	17	22				SIGNAL QUALITY DISPL.(25 PIN D-SUB)		
DSPA-4			1	70	1	19				SIGNAL QUALITY (26-PIN FLATCABLE)		1.861.731.00
			1	80	7	8A				PDM CONTROL		1.861.813.00
			1	80	17	10				SIGNAL QUALITY DISPL.(25 PIN D-SUB)		
DSPA-5			1	70	1	20				SIGNAL QUALITY (26-PIN FLATCABLE)		1.861.731.00
			1	80	7	8C				PDM CONTROL		1.861.813.00
			1	80	17	23				SIGNAL QUALITY DISPL.(25 PIN D-SUB)		
DSPA-6			1	70	1	21				SIGNAL QUALITY (26-PIN FLATCABLE)		1.861.731.00
			1	80	7	9A				PDM CONTROL		1.861.813.00
			1	80	17	11				SIGNAL QUALITY DISPL.(25 PIN D-SUB)		
DSPA-7			1	70	1	22				SIGNAL QUALITY (26-PIN FLATCABLE)		1.861.731.00
			1	80	7	9C				PDM CONTROL		1.861.813.00
			1	80	17	24				SIGNAL QUALITY DISPL.(25 PIN D-SUB)		
DSPB-0			1	70	1	14				SIGNAL QUALITY (26-PIN FLATCABLE)		1.861.731.00
			1	80	7	10A				PDM CONTROL		1.861.813.00
			1	80	17	20				SIGNAL QUALITY DISPL.(25 PIN D-SUB)		
DSPB-1			1	70	1	13				SIGNAL QUALITY (26-PIN FLATCABLE)		1.861.731.00
			1	80	7	10C				PDM CONTROL		1.861.813.00
			1	80	17	7				SIGNAL QUALITY DISPL.(25 PIN D-SUB)		

* WILLI STUDER AG * S I G N A L W I R E L I S T * 86/12/08 * 10:54 * P A G E 141 *

* 1.861.022.00 D820X PCM RECORDER * 86/08/27 - 00 *

SIGNAL NAME	COLOR	MI	ASY	GRP	ELM	PNT	S	LV	TYPE	DESCRIPTION OF ELEMENT	REMARK	ELEMENT NR.
DSPB-2			1	70	1	12				SIGNAL QUALITY (26-PIN FLATCABLE)		1.861.731.00
			1	80	7	11A				PDM CONTROL		1.861.813.00
			1	80	17	19				SIGNAL QUALITY DISPL.(25 PIN D-SUB)		
DSPB-3			1	70	1	11				SIGNAL QUALITY (26-PIN FLATCABLE)		1.861.731.00
			1	80	7	11C				PDM CONTROL		1.861.813.00
			1	80	17	6				SIGNAL QUALITY DISPL.(25 PIN D-SUB)		
DSPB-4			1	70	1	10				SIGNAL QUALITY (26-PIN FLATCABLE)		1.861.731.00
			1	80	7	12A				PDM CONTROL		1.861.813.00
			1	80	17	18				SIGNAL QUALITY DISPL.(25 PIN D-SUB)		
DSPB-5			1	70	1	9				SIGNAL QUALITY (26-PIN FLATCABLE)		1.861.731.00
			1	80	7	12C				PDM CONTROL		1.861.813.00
			1	80	17	5				SIGNAL QUALITY DISPL.(25 PIN D-SUB)		
DSPB-6			1	70	1	8				SIGNAL QUALITY (26-PIN FLATCABLE)		1.861.731.00
			1	80	7	13A				PDM CONTROL		1.861.813.00
			1	80	17	17				SIGNAL QUALITY DISPL.(25 PIN D-SUB)		
DSPB-7			1	70	1	7				SIGNAL QUALITY (26-PIN FLATCABLE)		1.861.731.00
			1	80	7	13C				PDM CONTROL		1.861.813.00
			1	80	17	4				SIGNAL QUALITY DISPL.(25 PIN D-SUB)		
DSSY			4	1	10	10C				TRANSFORMATTER		1.861.859.00
			4	1	12	10C				RT/TC CODEC		1.861.861.00
DTRI1			1	73	3	12				BOX-RACK 3 (CAGE) (25 PIN D-SUB)		1.861.583.00
			2	1	1	12				REARPANEL TO (BOX) (D-SUB 25P)		1.861.895.00
			2	1	4	10C				DETECTOR		1.861.804.00
			4	1	11	7B				RUN PROCESSOR		1.861.860.00
			4	1	18	12				CONNECTOR 3 (BACKPANEL RACK 3)		
			4	1	52	12				BOX-RACK 3 CONNECTOR (CABLE)		
DTRI2			1	73	3	11				BOX-RACK 3 (CAGE) (25 PIN D-SUB)		1.861.583.00
			2	1	1	11				REARPANEL TO (BOX) (D-SUB 25P)		1.861.895.00
			2	1	4	11C				DETECTOR		1.861.804.00
			4	1	11	8B				RUN PROCESSOR		1.861.860.00
			4	1	18	11				CONNECTOR 3 (BACKPANEL RACK 3)		
			4	1	52	11				BOX-RACK 3 CONNECTOR (CABLE)		
DTRI3			1	73	3	10				BOX-RACK 3 (CAGE) (25 PIN D-SUB)		1.861.583.00
			2	1	1	10				REARPANEL TO (BOX) (D-SUB 25P)		1.861.895.00
			2	1	4	12C				DETECTOR		1.861.804.00
			4	1	11	9B				RUN PROCESSOR		1.861.860.00
			4	1	18	10				CONNECTOR 3 (BACKPANEL RACK 3)		
			4	1	52	10				BOX-RACK 3 CONNECTOR (CABLE)		
DTRI4			1	73	3	9				BOX-RACK 3 (CAGE) (25 PIN D-SUB)		1.861.583.00
			2	1	1	9				REARPANEL TO (BOX) (D-SUB 25P)		1.861.895.00
			2	1	4	13C				DETECTOR		1.861.804.00
			4	1	11	10B				RUN PROCESSOR		1.861.860.00
			4	1	18	9				CONNECTOR 3 (BACKPANEL RACK 3)		
			4	1	52	9				BOX-RACK 3 CONNECTOR (CABLE)		

PUBLISHED: 12/86

WILLI STUDER AG * S I G N A L W I R E L I S T * 86/12/08 * 10:54 * P A G E 142

1.861.022.00 D820X PCM RECORDER * 86/08/27 - 00

SIGNAL NAME	COLOR	MI	ASY	GRP	ELM	PNT	S	LV	TYPE	DESCRIPTION OF ELEMENT	REMARK	ELEMENT NR.
DTR15			1	73	3	8				BOX-RACK 3 (CAGE) (25 PIN D-SUB)		1.861.583.00
			2	1	1	8				REARPANEL TO (BOX) (D-SUB 25P)		1.861.895.00
			2	1	4	17C				DETECTOR		1.861.804.00
			4	1	11	11B				RUN PROCESSOR		1.861.860.00
			4	1	18	8				CONNECTOR 3 (BACKPANEL RACK 3)		
			4	1	52	8				BOX-RACK 3 CONNECTOR (CABLE)		
DTR16			1	73	3	7				BOX-RACK 3 (CAGE) (25 PIN D-SUB)		1.861.583.00
			2	1	1	7				REARPANEL TO (BOX) (D-SUB 25P)		1.861.895.00
			2	1	4	18C				DETECTOR		1.861.804.00
			4	1	11	12B				RUN PROCESSOR		1.861.860.00
			4	1	18	7				CONNECTOR 3 (BACKPANEL RACK 3)		
			4	1	52	7				BOX-RACK 3 CONNECTOR (CABLE)		
DTR17			1	73	3	6				BOX-RACK 3 (CAGE) (25 PIN D-SUB)		1.861.583.00
			2	1	1	6				REARPANEL TO (BOX) (D-SUB 25P)		1.861.895.00
			2	1	4	19C				DETECTOR		1.861.804.00
			4	1	11	13B				RUN PROCESSOR		1.861.860.00
			4	1	18	6				CONNECTOR 3 (BACKPANEL RACK 3)		
			4	1	52	6				BOX-RACK 3 CONNECTOR (CABLE)		
DTR18			1	73	3	5				BOX-RACK 3 (CAGE) (25 PIN D-SUB)		1.861.583.00
			2	1	1	5				REARPANEL TO (BOX) (D-SUB 25P)		1.861.895.00
			2	1	4	20C				DETECTOR		1.861.804.00
			4	1	11	14B				RUN PROCESSOR		1.861.860.00
			4	1	18	5				CONNECTOR 3 (BACKPANEL RACK 3)		
			4	1	52	5				BOX-RACK 3 CONNECTOR (CABLE)		
DTR1			1	73	3	25				BOX-RACK 3 (CAGE) (25 PIN D-SUB)		1.861.583.00
			2	1	1	25				REARPANEL TO (BOX) (D-SUB 25P)		1.861.895.00
			2	1	4	10A				DETECTOR		1.861.804.00
			4	1	11	7A				RUN PROCESSOR		1.861.860.00
			4	1	18	25				CONNECTOR 3 (BACKPANEL RACK 3)		
			4	1	52	25				BOX-RACK 3 CONNECTOR (CABLE)		
DTR2			1	73	3	24				BOX-RACK 3 (CAGE) (25 PIN D-SUB)		1.861.583.00
			2	1	1	24				REARPANEL TO (BOX) (D-SUB 25P)		1.861.895.00
			2	1	4	11A				DETECTOR		1.861.804.00
			4	1	11	8A				RUN PROCESSOR		1.861.860.00
			4	1	18	24				CONNECTOR 3 (BACKPANEL RACK 3)		
			4	1	52	24				BOX-RACK 3 CONNECTOR (CABLE)		
DTR3			1	73	3	23				BOX-RACK 3 (CAGE) (25 PIN D-SUB)		1.861.583.00
			2	1	1	23				REARPANEL TO (BOX) (D-SUB 25P)		1.861.895.00
			2	1	4	12A				DETECTOR		1.861.804.00
			4	1	11	9A				RUN PROCESSOR		1.861.860.00
			4	1	18	23				CONNECTOR 3 (BACKPANEL RACK 3)		
			4	1	52	23				BOX-RACK 3 CONNECTOR (CABLE)		
DTR4			1	73	3	22				BOX-RACK 3 (CAGE) (25 PIN D-SUB)		1.861.583.00
			2	1	1	22				REARPANEL TO (BOX) (D-SUB 25P)		1.861.895.00
			2	1	4	13A				DETECTOR		1.861.804.00
			4	1	11	10A				RUN PROCESSOR		1.861.860.00
			4	1	18	22				CONNECTOR 3 (BACKPANEL RACK 3)		
			4	1	52	22				BOX-RACK 3 CONNECTOR (CABLE)		

WILLI STUDER AG * S I G N A L W I R E L I S T * 86/12/08 * 10:54 * P A G E 143

1.861.022.00 D820X PCM RECORDER * 86/08/27 - 00

SIGNAL NAME	COLOR	MI	ASY	GRP	ELM	PNT	S	LV	TYPE	DESCRIPTION OF ELEMENT	REMARK	ELEMENT NR.
DTR5			1	73	3	21				BOX-RACK 3 (CAGE) (25 PIN D-SUB)		1.861.583.00
			2	1	1	21				REARPANEL TO (BOX) (D-SUB 25P)		1.861.895.00
			2	1	4	17A				DETECTOR		1.861.804.00
			4	1	11	11A				RUN PROCESSOR		1.861.860.00
			4	1	18	21				CONNECTOR 3 (BACKPANEL RACK 3)		
			4	1	52	21				BOX-RACK 3 CONNECTOR (CABLE)		
DTR6			1	73	3	20				BOX-RACK 3 (CAGE) (25 PIN D-SUB)		1.861.583.00
			2	1	1	20				REARPANEL TO (BOX) (D-SUB 25P)		1.861.895.00
			2	1	4	18A				DETECTOR		1.861.804.00
			4	1	11	12A				RUN PROCESSOR		1.861.860.00
			4	1	18	20				CONNECTOR 3 (BACKPANEL RACK 3)		
			4	1	52	20				BOX-RACK 3 CONNECTOR (CABLE)		
DTR7			1	73	3	19				BOX-RACK 3 (CAGE) (25 PIN D-SUB)		1.861.583.00
			2	1	1	19				REARPANEL TO (BOX) (D-SUB 25P)		1.861.895.00
			2	1	4	19A				DETECTOR		1.861.804.00
			4	1	11	13A				RUN PROCESSOR		1.861.860.00
			4	1	18	19				CONNECTOR 3 (BACKPANEL RACK 3)		
			4	1	52	19				BOX-RACK 3 CONNECTOR (CABLE)		
DTR8			1	73	3	18				BOX-RACK 3 (CAGE) (25 PIN D-SUB)		1.861.583.00
			2	1	1	18				REARPANEL TO (BOX) (D-SUB 25P)		1.861.895.00
			2	1	4	20A				DETECTOR		1.861.804.00
			4	1	11	14A				RUN PROCESSOR		1.861.860.00
			4	1	18	18				CONNECTOR 3 (BACKPANEL RACK 3)		
			4	1	52	18				BOX-RACK 3 CONNECTOR (CABLE)		
D0			1	80	6	23C				ANALOG ROUTING		1.861.814.00
			1	80	7	23A				PDM CONTROL		1.861.813.00
D1			1	80	6	23A				ANALOG ROUTING		1.861.814.00
			1	80	7	23C				PDM CONTROL		1.861.813.00
D2			1	80	6	24C				ANALOG ROUTING		1.861.814.00
			1	80	7	24A				PDM CONTROL		1.861.813.00
D3			1	80	6	24A				ANALOG ROUTING		1.861.814.00
			1	80	7	24C				PDM CONTROL		1.861.813.00
D4			1	80	6	25C				ANALOG ROUTING		1.861.814.00
			1	80	7	25A				PDM CONTROL		1.861.813.00
D5			1	80	6	25A				ANALOG ROUTING		1.861.814.00
			1	80	7	25C				PDM CONTROL		1.861.813.00
D6			1	80	6	26C				ANALOG ROUTING		1.861.814.00
			1	80	7	26A				PDM CONTROL		1.861.813.00
D7			1	80	6	26A				ANALOG ROUTING		1.861.814.00
			1	80	7	26C				PDM CONTROL		1.861.813.00
EEPDM			1	80	3	7A				PDM DEMODULATOR 1		1.861.812.00
			1	80	4	7A				PDM DEMODULATOR 2		1.861.812.00
			1	80	7	17C				PDM CONTROL		1.861.813.00

PUBLISHED: 12/86

* WILLI STUDER AG * S I G N A L W I R E L I S T * 86/12/08 * 10:54 * P A G E 144 *

* 1.861.022.00 D820X PCM RECORDER * 86/08/27 - 00 *

SIGNAL NAME	COLOR	MI	ASY	GRP	ELM	PNT	S	LV	TYPE	DESCRIPTION OF ELEMENT		REMARK	ELEMENT NR.
EMPH			1	80	2	19C				PDM MODULATOR			1.861.811.00
			1	80	7	17A				PDM CONTROL			1.861.813.00
FAD1			11	25	3	11			B	CONN. PARALLEL REMOTE CONTROL	J03		
			11	27	4	21				TO CONN. PARALLEL REMOTE CONTR.	P04		
FAC2			11	25	3	12			B	CONN. PARALLEL REMOTE CONTROL	J03		
			11	27	4	23				TO CONN. PARALLEL REMOTE CONTR.	P04		
FANOUT			4	1	23	12C				POWER SUPPLY			1.861.515.00
FBIWS			4	1	10	16C				TRANSFORMATTER			1.861.859.00
FBWS			4	1	10	16A				TRANSFORMATTER			1.861.859.00
FLEM			4	1	1	9B				ANALOG OUTPUT			1.861.751.00
			4	1	2	4C				ANALOG INPUT			1.861.752.00
			4	1	4	29A				GAINS CONTROL			1.861.853.00
FRMGND			11	20	31	1				TO GRP25, ELM04/05	P21		
			11	20	31	8				TO GRP25, ELM04/05	P21		
			11	20	50	1				SMPTE/EBU INTERFACE	J11		1.820.751.00
			11	20	50	8				SMPTE/EBU INTERFACE	J11		1.820.751.00
			11	25	4	1			B	CONNECTOR SMPTE/EBU BUS	J04		
			11	25	4	9			B	CONNECTOR SMPTE/EBU BUS	J04		
			11	25	5	1			B	CONNECTOR SMPTE/EBU BUS	J05		
			11	25	5	9			B	CONNECTOR SMPTE/EBU BUS	J05		
F1			4	1	10	14C				TRANSFORMATTER			1.861.859.00
F2			4	1	10	15A				TRANSFORMATTER			1.861.859.00
F3			4	1	10	15B				TRANSFORMATTER			1.861.859.00
GND	5-4		11	1	1	3			J	POWER CONNECTOR	P01		
	5-4		11	2	1	1			J	EARTH CONTACT			
	4		11	2	2	1			J	EARTH CONTACT			
			11	2	3	1				EARTH CONTACT			1.010.001.53
	4		11	4	1	11			Y	LINE FILTER			
			11	20	30	1				SSDA INT. SYNCHRONIZER	P20		
			11	20	30	8				SSDA INT. SYNCHRONIZER	P20		
			11	27	5	1			Y		P05		
	0		11	38	5	1			L	GROUND CONNECTION (WIRE FIELD)			
GNDCK1			4	1	13	7B				TIMING + TEST			1.861.862.00
			4	1	19	9				CONNECTOR 4	(TC+AES+BNC)		
			4	3	14	2				CLOCK INPUT	(BNC)		
			4	3	15	2				VIDEO CLOCK INPUT	(BNC)		
			4	3	26	3				BNC INTERCONNECTION	(CIS)		1.861.776.00
GNDCK0			4	1	13	8B				TIMING + TEST			1.861.862.00
			4	1	19	11				CONNECTOR 4	(TC+AES+BNC)		
			4	3	13	2				CLOCK OUTPUT	(BNC)		
			4	3	26	5				BNC INTERCONNECTION	(CIS)		1.861.776.00

* WILLI STUDER AG * S I G N A L W I R E L I S T * 86/12/08 * 10:54 * P A G E 145 *

* 1.861.022.00 D820X PCM RECORDER * 86/08/27 - 00 *

SIGNAL NAME	COLOR	MI	ASY	GRP	ELM	PNT	S	LV	TYPE	DESCRIPTION OF ELEMENT		REMARK	ELEMENT NR.
GNDDAC1			1	73	1	14				BOX-RACK 1 (RACK)	(25 PIN D-SUB)		1.861.583.00
			1	80	6	2C				ANALOG ROUTING			1.861.814.00
			1	80	14	14				BOX-RACK 1 TO REAR PANEL TO			
			4	1	1	14A				ANALOG OUTPUT			1.861.751.00
			4	1	17	14				CONNECTOR 2	(BACKPANEL RACK 1)		
			4	1	50	14				BOX-RACK 1 CONNECTOR	(CABLE)		
GNDDAC2			1	73	1	15				BOX-RACK 1 (RACK)	(25 PIN D-SUB)		1.861.583.00
			1	80	6	3C				ANALOG ROUTING			1.861.814.00
			1	80	14	15				BOX-RACK 1 TO REAR PANEL TO			
			4	1	1	18C				ANALOG OUTPUT			1.861.751.00
			4	1	17	15				CONNECTOR 2	(BACKPANEL RACK 1)		
			4	1	50	15				BOX-RACK 1 CONNECTOR	(CABLE)		
GNDIN-1			4	1	2	15B				ANALOG INPUT			1.861.752.00
			4	1	16	12				CONNECTOR 1	(ANALOG I/O)		1.861.775.00
			4	2	4	1				CHANNEL 1 INPUT	(XLR)		1.861.775.00
			4	2	21	2				CHANNEL 1 I/O (CABLE)	(CIS)		
GNDIN-2			4	1	2	17B				ANALOG INPUT			1.861.752.00
			4	1	16	10				CONNECTOR 1	(ANALOG I/O)		1.861.775.00
			4	2	2	1				CHANNEL 2 INPUT	(XLR)		1.861.775.00
			4	2	22	2				CHANNEL 2 I/O (CABLE)	(CIS)		
GNDOUT-1			4	1	1	15B				ANALOG OUTPUT			1.861.751.00
			4	1	16	4				CONNECTOR 1	(ANALOG I/O)		1.861.775.00
			4	2	3	1				CHANNEL 1 OUTPUT	(XLR)		1.861.775.00
			4	2	21	5				CHANNEL 1 I/O (CABLE)	(CIS)		
GNDOUT-2			4	1	1	17B				ANALOG OUTPUT			1.861.751.00
			4	1	16	2				CONNECTOR 1	(ANALOG I/O)		1.861.775.00
			4	2	1	1				CHANNEL 2 OUTPUT	(XLR)		1.861.775.00
			4	2	22	5				CHANNEL 2 I/O (CABLE)	(CIS)		
GNDTCIN			4	1	19	7				CONNECTOR 4	(TC+AES+BNC)		
			4	3	8	1				TC INPUT	(XLR)		
			4	3	10	2				TIME CODE I/O BOARD	(CIS)		
			4	3	24	2				TC TRANSFORMATOR	(CIS)		1.861.771.00
GNDTCOUT			4	1	19	5				CONNECTOR 4	(TC+AES+BNC)		
			4	3	7	1				TC OUTPUT	(XLR)		
			4	3	10	5				TIME CODE I/O BOARD	(CIS)		
			4	3	24	5				TC TRANSFORMATOR	(CIS)		1.861.771.00
GROUND			4	3	9	1				RT OUTPUT	(XLR)		
			4	3	25	1				REFERENCE TIME I/O	(CIS)		
			4	3	25	5				REFERENCE TIME I/O	(CIS)		
HDTR1			2	3	1	9				HEADBLOCK READ (P4)	(D-SUB 25P)		1.861.801.00
			5	3	1	9				HEAD-AMPLIFIER CONNECTOR	(D-SUB 25)		1.861.805.00
HDTR10			2	3	1	7				HEADBLOCK READ (P4)	(D-SUB 25P)		1.861.801.00
			5	3	1	7				HEAD-AMPLIFIER CONNECTOR	(D-SUB 25)		1.861.805.00
HDTR11			2	3	1	10				HEADBLOCK READ (P4)	(D-SUB 25P)		1.861.801.00
			5	3	1	10				HEAD-AMPLIFIER CONNECTOR	(D-SUB 25)		1.861.805.00

PUBLISHED: 12/86

WILLI STUDER AG * SIGNAL WIRE LIST * 86/12/08 * 10:54 * PAGE 146

1.861.022.00 D820X PCM RECORDER * 86/08/27 - 00

SIGNAL NAME	COLOR	MI	ASY	GRP	ELM	PNT	S	LV	TYPE	DESCRIPTION OF ELEMENT	REMARK	ELEMENT NR.
HDTR12			2	3	1	11				HEADBLOCK READ (P4) (D-SUB 25P)		1.861.801.00
			5	3	1	11				HEAD-AMPLIFIER CONNECTOR (D-SUB 25)		1.861.805.00
HDTR2			2	3	1	12				HEADBLOCK READ (P4) (D-SUB 25P)		1.861.801.00
			5	3	1	12				HEAD-AMPLIFIER CONNECTOR (D-SUB 25)		1.861.805.00
HDTR3			2	3	1	4				HEADBLOCK READ (P4) (D-SUB 25P)		1.861.801.00
			5	3	1	4				HEAD-AMPLIFIER CONNECTOR (D-SUB 25)		1.861.805.00
HDTR4			2	3	1	5				HEADBLOCK READ (P4) (D-SUB 25P)		1.861.801.00
			5	3	1	5				HEAD-AMPLIFIER CONNECTOR (D-SUB 25)		1.861.805.00
HDTR5			2	3	1	1				HEADBLOCK READ (P4) (D-SUB 25P)		1.861.801.00
			5	3	1	1				HEAD-AMPLIFIER CONNECTOR (D-SUB 25)		1.861.805.00
HDTR6			2	3	1	8				HEADBLOCK READ (P4) (D-SUB 25P)		1.861.801.00
			5	3	1	8				HEAD-AMPLIFIER CONNECTOR (D-SUB 25)		1.861.805.00
HDTR7			2	3	1	3				HEADBLOCK READ (P4) (D-SUB 25P)		1.861.801.00
			5	3	1	3				HEAD-AMPLIFIER CONNECTOR (D-SUB 25)		1.861.805.00
HDTR8			2	3	1	6				HEADBLOCK READ (P4) (D-SUB 25P)		1.861.801.00
			5	3	1	6				HEAD-AMPLIFIER CONNECTOR (D-SUB 25)		1.861.805.00
HDTR9			2	3	1	2				HEADBLOCK READ (P4) (D-SUB 25P)		1.861.801.00
			5	3	1	2				HEAD-AMPLIFIER CONNECTOR (D-SUB 25)		1.861.805.00
HI/LO			4	1	10	19A				TRANSFORMATTER		1.861.859.00
			4	1	13	20A				TIMING + TEST		1.861.862.00
HISPD			1	80	3	22C				PDM DEMODULATOR 1		1.861.812.00
			1	80	4	22C				PDM DEMODULATOR 2		1.861.812.00
			1	80	7	22A				PDM CONTROL		1.861.813.00
			2	1	4	30B				DETECTOR		1.861.804.00
			2	1	7	3CB				PLAYBACK AMPLIFIER		1.861.801.00
IAN/PDM			1	80	3	22A				PDM DEMODULATOR 1		1.861.812.00
			1	80	4	22A				PDM DEMODULATOR 2		1.861.812.00
			1	80	7	22C				PDM CONTROL		1.861.813.00
ICARRY			4	1	4	23A				GAINS CONTROL		1.861.853.00
			4	1	5	23A				DAPRO INTERFACE		1.861.854.00
ICLK5			4	1	10	26B				TRANSFORMATTER		1.861.859.00
			4	1	13	26B				TIMING + TEST		1.861.862.00
ICLK6			4	1	10	26C				TRANSFORMATTER		1.861.859.00
			4	1	12	26C				RT/TC CODEC		1.861.861.00
			4	1	13	26C				TIMING + TEST		1.861.862.00
ICOUT1WR			1	8C	6	30A				ANALOG ROUTING		1.861.814.00
			1	8C	7	30C				PDM CONTROL		1.861.813.00
ICOUT2WR			1	80	6	30C				ANALOG ROUTING		1.861.814.00
			1	8C	7	30A				PDM CONTROL		1.861.813.00

WILLI STUDER AG * SIGNAL WIRE LIST * 86/12/08 * 10:54 * PAGE 147

1.861.022.00 D820X PCM RECORDER * 86/08/27 - 00

SIGNAL NAME	COLOR	MI	ASY	GRP	ELM	PNT	S	LV	TYPE	DESCRIPTION OF ELEMENT	REMARK	ELEMENT NR.
IERRL			4	1	10	4B				TRANSFORMATTER		1.861.859.00
IMASSA			2	1	4	30A				DETECTOR		1.861.804.00
			2	1	5	30C				WRITE AMPLIFIER		1.861.803.00
IMON/STE			1	80	1	31A				CUE/PQ DELAY		1.861.816.00
			1	80	2	31A				PDM MODULATOR		1.861.811.00
			1	80	3	31A				PDM DEMODULATOR 1		1.861.812.00
			1	80	4	31A				PDM DEMODULATOR 2		1.861.812.00
			1	80	7	31C				PDM CONTROL		1.861.813.00
IR-REFEX			11	25	2	13			B	CONNECTOR SYNCHRONIZER J02		
			11	25	3	13			B	CONN. PARALLEL REMOTE CONTROL J03		
			11	27	3	25				TO CONNECTOR SYNCHRONIZER P03		
			11	27	4	25				TO CONN. PARALLEL REMOTE CONTR. P04		
IRECD1			2	1	4	28A				DETECTOR		1.861.804.00
			2	1	5	28C				WRITE AMPLIFIER		1.861.803.00
IRECD2			2	1	4	28C				DETECTOR		1.861.804.00
			2	1	5	28A				WRITE AMPLIFIER		1.861.803.00
IREC1			2	1	4	27A				DETECTOR		1.861.804.00
			2	1	5	27C				WRITE AMPLIFIER		1.861.803.00
IREC11			2	1	4	29A				DETECTOR		1.861.804.00
			2	1	5	29C				WRITE AMPLIFIER		1.861.803.00
IREC12			2	1	4	29C				DETECTOR		1.861.804.00
			2	1	5	29A				WRITE AMPLIFIER		1.861.803.00
IREC2			2	1	4	27C				DETECTOR		1.861.804.00
			2	1	5	27A				WRITE AMPLIFIER		1.861.803.00
ISPLDET			4	1	8	22C				CODEC CONTROL		1.861.857.00
			4	1	9	17A				CODEC MEMORY		1.861.858.00
			4	1	10	22C				TRANSFORMATTER		1.861.859.00
ISYNC			4	1	10	20B				TRANSFORMATTER		1.861.859.00
			4	1	11	20B				RUN PROCESSOR		1.861.860.00
ISYRT			4	1	10	9C				TRANSFORMATTER		1.861.859.00
			4	1	12	9C				RT/TC CODEC		1.861.861.00
ITDSMUTE			2	1	4	31C				DETECTOR		1.861.804.00
			2	1	6	31A				TAPE DECK MONITOR		1.861.802.00
ITEST			4	1	10	4A				TRANSFORMATTER		1.861.859.00
ITE2			4	1	13	23A				TIMING + TEST		1.861.862.00
ITRAR			4	1	10	15C				TRANSFORMATTER		1.861.859.00
IWRET			4	1	10	20C				TRANSFORMATTER		1.861.859.00
			4	1	11	20C				RUN PROCESSOR		1.861.860.00

PUBLISHED: 12/86

* WILLI STUDER AG * S I G N A L W I R E L I S T * 86/12/08 * 10:54 * P A G E 148 *

* 1.861.022.00 D820X PCM RECORDER * 86/08/27 - 00 *

SIGNAL NAME	COLOR	MI	ASY	GRP	ELM	PNT	S	LV	TYPE	DESCRIPTION OF ELEMENT	REMARK	ELEMENT NR.
IWROUT1			2	2	1	2				HEADBLOCK WRITE (P4) (D-SUB 25P)		1.861.803.00
			5	2	1	2				HEADBLOCK CONNECTOR WRITE (P4)		1.116.861.10
IWROUT10			2	2	1	20				HEADBLOCK WRITE (P4) (D-SUB 25P)		1.861.803.00
			5	2	1	20				HEADBLOCK CONNECTOR WRITE (P4)		1.116.861.10
IWROUT11			2	2	1	24				HEADBLOCK WRITE (P4) (D-SUB 25P)		1.861.803.00
			5	2	1	24				HEADBLOCK CONNECTOR WRITE (P4)		1.116.861.10
IWROUT12			2	2	1	26				HEADBLOCK WRITE (P4) (D-SUB 25P)		1.861.803.00
			5	2	1	26				HEADBLOCK CONNECTOR WRITE (P4)		1.116.861.10
IWROUT2			2	2	1	4				HEADBLOCK WRITE (P4) (D-SUB 25P)		1.861.803.00
			5	2	1	4				HEADBLOCK CONNECTOR WRITE (P4)		1.116.861.10
IWROUT3			2	2	1	6				HEADBLOCK WRITE (P4) (D-SUB 25P)		1.861.803.00
			5	2	1	6				HEADBLOCK CONNECTOR WRITE (P4)		1.116.861.10
IWROUT4			2	2	1	8				HEADBLOCK WRITE (P4) (D-SUB 25P)		1.861.803.00
			5	2	1	8				HEADBLOCK CONNECTOR WRITE (P4)		1.116.861.10
IWROUT5			2	2	1	10				HEADBLOCK WRITE (P4) (D-SUB 25P)		1.861.803.00
			5	2	1	10				HEADBLOCK CONNECTOR WRITE (P4)		1.116.861.10
IWROUT6			2	2	1	12				HEADBLOCK WRITE (P4) (D-SUB 25P)		1.861.803.00
			5	2	1	12				HEADBLOCK CONNECTOR WRITE (P4)		1.116.861.10
IWROUT7			2	2	1	14				HEADBLOCK WRITE (P4) (D-SUB 25P)		1.861.803.00
			5	2	1	14				HEADBLOCK CONNECTOR WRITE (P4)		1.116.861.10
IWROUT8			2	2	1	16				HEADBLOCK WRITE (P4) (D-SUB 25P)		1.861.803.00
			5	2	1	16				HEADBLOCK CONNECTOR WRITE (P4)		1.116.861.10
IWROUT9			2	2	1	18				HEADBLOCK WRITE (P4) (D-SUB 25P)		1.861.803.00
			5	2	1	18				HEADBLOCK CONNECTOR WRITE (P4)		1.116.861.10
I2ECCLK			4	1	5	26A				DAPRC INTERFACE		1.861.854.00
			4	1	13	17B				TIMING + TEST		1.861.862.00
K-BRAKEL			11	20	43	31A				TAPE DECK PERIPHERY CONTR. J04		1.820.762.00
	1		11	20	63	1			U	WIRE FIELD (TO BRAKE SOLENOIDS)		
	1		11	20	72	2			F	TO BRAKE SOLENOID, LEFT		
	1		11	40	1	2			M	BRAKE SOLENOID		
K-BRAKER			11	20	43	32A				TAPE DECK PERIPHERY CONTR. J04		1.820.762.00
	4		11	20	63	2			L	WIRE FIELD (TO BRAKE SOLENOIDS)		
	4		11	20	73	2			F	TO BRAKE SOLENOID, RIGHT		
	4		11	41	1	2			M	BRAKE SOLENOID		
K-PWRUP			1	73	1	25				BOX-RACK 1 (RACK) (25 PIN D-SUB)		1.861.583.00
			1	79	4	24				POWER CONNECTOR RACK (25 PIN D-SUB)		
			1	80	13	24				RACK PWR CONNECTOR (25 PIN D-SUB)		
			1	80	14	25				BOX-RACK 1 TO REAR PANEL TO		
			4	1	14	25B				SYSTEM CONTROLLER 1		1.861.763.00
			4	1	15	25B				SYSTEM CONTROLLER 2		1.861.763.00
												./.

* WILLI STUDER AG * S I G N A L W I R E L I S T * 86/12/08 * 10:54 * P A G E 149 *

* 1.861.022.00 D820X PCM RECORDER * 86/08/27 - 00 *

SIGNAL NAME	COLOR	MI	ASY	GRP	ELM	PNT	S	LV	TYPE	DESCRIPTION OF ELEMENT	REMARK	ELEMENT NR.
<<— CONT.OF			4	1	17	25				CONNECTOR 2 (BACKPANEL RACK 1)		
K-PWRUP			4	1	23	10A				POWER SUPPLY		1.861.515.00
			4	1	50	25				BOX-RACK 1 CONNECTOR (CABLE)		
KEY/CDIR			11	25	2	8			B	CONNECTOR SYNCHRONIZER J02		
			11	27	3	15				TO CONNECTOR SYNCHRONIZER P03		
KINTAP			3	3	6	18				DATA MP KEYBOARD (FLATCABLE 26P)		1.861.746.00
			3	8	1	18				DATA MP AMPLIF (FLATCAB. SOLD. 26P)		1.861.745.00
KMCCH1			3	3	6	20				DATA MP KEYBOARD (FLATCABLE 26P)		1.861.746.00
			3	8	1	20				DATA MP AMPLIF (FLATCAB. SOLD. 26P)		1.861.745.00
KMCCH2			3	3	6	22				DATA MP KEYBOARD (FLATCABLE 26P)		1.861.746.00
			3	8	1	22				DATA MP AMPLIF (FLATCAB. SOLD. 26P)		1.861.745.00
KMCTC			3	3	6	26				DATA MP KEYBOARD (FLATCABLE 26P)		1.861.746.00
			3	8	1	26				DATA MP AMPLIF (FLATCAB. SOLD. 26P)		1.861.745.00
KMCUE1			3	3	1	19				CBUS REARPANEL RACK (D-SUB 25P M)		1.861.744.00
			3	3	6	19				DATA MP KEYBOARD (FLATCABLE 26P)		1.861.746.00
KMCUE2			3	3	6	17				DATA MP KEYBOARD (FLATCABLE 26P)		1.861.746.00
			3	8	1	17				DATA MP AMPLIF (FLATCAB. SOLD. 26P)		1.861.745.00
LBIT0			3	2	3	15				DATA CCP KEYBOARD (FLTCAB. 26P)		1.861.744.00
			3	10	1	15				DATA CCP TRANSCEIV. (FLATCABLE 26P)		1.861.743.00
LBIT1			3	2	3	16				DATA CCP KEYBOARD (FLTCAB. 26P)		1.861.744.00
			3	10	1	16				DATA CCP TRANSCEIV. (FLATCABLE 26P)		1.861.743.00
LBIT2			3	2	3	17				DATA CCP KEYBOARD (FLTCAB. 26P)		1.861.744.00
			3	10	1	17				DATA CCP TRANSCEIV. (FLATCABLE 26P)		1.861.743.00
LBIT3			3	2	3	18				DATA CCP KEYBOARD (FLTCAB. 26P)		1.861.744.00
			3	10	1	18				DATA CCP TRANSCEIV. (FLATCABLE 26P)		1.861.743.00
LBIT4			3	2	3	19				DATA CCP KEYBOARD (FLTCAB. 26P)		1.861.744.00
			3	10	1	19				DATA CCP TRANSCEIV. (FLATCABLE 26P)		1.861.743.00
LBIT5			3	2	3	20				DATA CCP KEYBOARD (FLTCAB. 26P)		1.861.744.00
			3	10	1	20				DATA CCP TRANSCEIV. (FLATCABLE 26P)		1.861.743.00
LBIT6			3	2	3	21				DATA CCP KEYBOARD (FLTCAB. 26P)		1.861.744.00
			3	10	1	21				DATA CCP TRANSCEIV. (FLATCABLE 26P)		1.861.743.00
LBIT7			3	2	3	22				DATA CCP KEYBOARD (FLTCAB. 26P)		1.861.744.00
			3	10	1	22				DATA CCP TRANSCEIV. (FLATCABLE 26P)		1.861.743.00
LBY0			3	2	3	26				DATA CCP KEYBOARD (FLTCAB. 26P)		1.861.744.00
			3	10	1	26				DATA CCP TRANSCEIV. (FLATCABLE 26P)		1.861.743.00
LBY1			3	2	3	25				DATA CCP KEYBOARD (FLTCAB. 26P)		1.861.744.00
			3	10	1	25				DATA CCP TRANSCEIV. (FLATCABLE 26P)		1.861.743.00

PUBLISHED: 12/86

* WILLI STUDER AG * S I G N A L W I R E L I S T * 86/12/08 * 10:54 * P A G E 150 *

* 1.861.022.00 D82JX PCM RECCRDER * 86/08/27 - 00 *

SIGNAL NAME	COLOR	MI	ASY	GRP	ELM	PNT	S	LV	TYPE	DESCRIPTION OF ELEMENT	REMARK	ELEMENT NR.
L8Y2			3	2	3	24				DATA CCP KEYBOARD (FLTCAB. 26P)		1.861.744.00
			3	10	1	24				DATA CCP TRANSCEIV. (FLATCABLE 26P)		1.861.743.00
LINE1	1		11	1	1	1			J	POWER CONNECTOR P01		
	1		11	3	1	1			J	POWER SWITCH		
	1		11	4	1	4			Y	LINE FILTER		
	1		11	4	1	5			Y	LINE FILTER		
LINE2	6		11	1	1	2			J	POWER CONNECTOR P01		
	6		11	3	1	2			J	POWER SWITCH		
	6		11	4	1	14			Y	LINE FILTER		
	6		11	4	1	15			Y	LINE FILTER		
LCTREND			4	1	11	19C				RUN PROCESSOR		1.861.860.00
MCPRES			3	3	6	15				DATA MP KEYBOARD (FLATCABLE 26P)		1.861.746.00
			3	8	1	15				DATA MP AMPLIF (FLATCAB. SOLD. 26P)		1.861.745.00
MCNGND			1	79	3	25				CAGE PWR CONNECTOR (25 PIN D-SUB)		
			1	79	4	25				POWER CONNECTOR RACK (25 PIN D-SUB)		
			1	80	6	18A				ANALOG ROUTING		1.861.814.00
			1	80	13	25				RACK PWR CONNECTOR (25 PIN D-SUB)		
	4		1	80	19	25				RACK-MONITOR PANEL (D-SUB CRIMP)		
			2	1	2	25				POWER DELTA MOLEX (P2) (D-SUB 25P)		1.861.895.00
			2	1	6	18C				TAPE DECK MONITOR		1.861.802.00
			3	3	1	25				CBUS REARPANEL RACK (D-SUB 25P M)		1.861.744.00
			3	3	5	3				TO TANDEM POT (CIS 6P) J1		1.912.001.30
			3	7	1	3				TANDEM POT SOLD.		1.912.001.30
			3	7	1	6				TANDEM POT SOLD.		1.912.001.30
MCNTR1			1	79	3	12				CAGE PWR CONNECTOR (25 PIN D-SUB)		
			1	79	4	12				POWER CONNECTOR RACK (25 PIN D-SUB)		
			1	80	6	17C				ANALOG ROUTING		1.861.814.00
			1	80	13	12				RACK PWR CONNECTOR (25 PIN D-SUB)		
	9		1	80	19	12				RACK-MONITOR PANEL (D-SUB CRIMP)		
			2	1	2	12				POWER DELTA MOLEX (P2) (D-SUB 25P)		1.861.895.00
			2	1	6	18A				TAPE DECK MONITOR		1.861.802.00
			3	3	1	13				CBUS REARPANEL RACK (D-SUB 25P M)		1.861.744.00
MCNTR2			1	79	3	13				CAGE PWR CONNECTOR (25 PIN D-SUB)		
			1	79	4	13				POWER CONNECTOR RACK (25 PIN D-SUB)		
			1	80	6	18C				ANALOG ROUTING		1.861.814.00
			1	80	13	13				RACK PWR CONNECTOR (25 PIN D-SUB)		
	6		1	80	19	13				RACK-MONITOR PANEL (D-SUB CRIMP)		
			2	1	2	13				POWER DELTA MOLEX (P2) (D-SUB 25P)		1.861.895.00
			2	1	6	19A				TAPE DECK MONITOR		1.861.802.00
			3	3	1	12				CBUS REARPANEL RACK (D-SUB 25P M)		1.861.744.00
MCN1			2	1	4	24C				DETECTOR		1.861.804.00
			2	1	6	24A				TAPE DECK MONITOR		1.861.802.00
MCN2			2	1	4	25A				DETECTOR		1.861.804.00
			2	1	6	25C				TAPE DECK MONITOR		1.861.802.00
MCN3			2	1	4	25C				DETECTOR		1.861.804.00
			2	1	6	25A				TAPE DECK MONITOR		1.861.802.00

* WILLI STUDER AG * S I G N A L W I R E L I S T * 86/12/08 * 10:54 * P A G E 151 *

* 1.861.022.00 D820X PCM RECCRDER * 86/08/27 - 00 *

SIGNAL NAME	COLOR	MI	ASY	GRP	ELM	PNT	S	LV	TYPE	DESCRIPTION OF ELEMENT	REMARK	ELEMENT NR.
MCN4			2	1	4	26A				DETECTOR		1.861.804.00
			2	1	6	26C				TAPE DECK MONITOR		1.861.802.00
MCN5			2	1	4	26C				DETECTOR		1.861.804.00
			2	1	6	26A				TAPE DECK MONITOR		1.861.802.00
MPSMUTE			1	80	7	20A				PDM CONTROL		1.861.813.00
	4		1	80	19	4				RACK-MONITOR PANEL (D-SUB CRIMP)		
			3	3	1	4				CBUS REARPANEL RACK (D-SUB 25P M)		1.861.744.00
MPSPL1	2		3	3	3	3				AUDIO SPEAKER LEFT (CIS 5P) J4		1.861.746.00
	2		3	5	1	1				SPEAKER LEFT		71.01.0108
MPSPL2	0		3	3	3	4				AUDIO SPEAKER LEFT (CIS 5P) J4		1.861.746.00
	0		3	5	1	2				SPEAKER LEFT		71.01.0108
MPSPR1	2		3	3	2	3				AUDIO SPEAKER RIGHT (CIS 3P) J3		1.861.746.00
	2		3	4	1	1				SPEAKER RIGHT		71.01.0108
MPSPR2	0		3	3	2	2				AUDIO SPEAKER RIGHT (CIS 3P) J3		1.861.746.00
	0		3	4	1	2				SPEAKER RIGHT		71.01.0108
MVARI			4	1	11	23B				RUN PROCESSOR		1.861.860.00
			4	1	12	23B				RT/TC CODEC		1.861.861.00
OC-RES1			11	20	43	27A				TAPE DECK PERIPHERY CONTR. J04		1.870.762.00
OC-RES2			11	20	43	28A				TAPE DECK PERIPHERY CONTR. J04		1.870.762.00
OC-RES3			11	20	43	29A				TAPE DECK PERIPHERY CONTR. J04		1.870.762.00
OC-RES4			11	20	43	30A				TAPE DECK PERIPHERY CONTR. J04		1.870.762.00
OR-CMCLK			11	25	2	11			B	CONNECTOR SYNCHRONIZER J02		
			11	27	3	21				TO CONNECTOR SYNCHRONIZER P03		
OR-MVCLK			11	25	2	7			B	CONNECTOR SYNCHRONIZER J02		
			11	27	3	13				TO CONNECTOR SYNCHRONIZER P03		
OR-MVDIR			11	25	2	10			B	CONNECTOR SYNCHRONIZER J02		
			11	27	3	19				TO CONNECTOR SYNCHRONIZER P03		
OR-SYEN8			11	25	2	12			B	CONNECTOR SYNCHRONIZER J02		
			11	27	3	23				TO CONNECTOR SYNCHRONIZER P03		
P-ADDR00			4	1	14	20A				SYSTEM CONTROLLER 1		1.861.763.00
P-ADDR01			4	1	14	20B				SYSTEM CONTROLLER 1		1.861.763.00
P-ADDR02			4	1	14	20C				SYSTEM CONTROLLER 1		1.861.763.00
P-ADDR03			4	1	14	21A				SYSTEM CONTROLLER 1		1.861.763.00
P-ADDR04			4	1	14	21B				SYSTEM CONTROLLER 1		1.861.763.00
P-ADDR05			4	1	14	21C				SYSTEM CONTROLLER 1		1.861.763.00

WILLI STUDER AG * S I G N A L W I R E L I S T * 86/12/08 * 10:54 * P A G E 152 *
1.861.022.00 D820X PCM RECORDER * 86/08/27 - 00 *

SIGNAL NAME	COLOR	MI	ASY	GRP	ELM	PNT	S	LV	TYPE	DESCRIPTION OF ELEMENT	REMARK	ELEMENT NR.
P-ADDR06			4	1	14	22A				SYSTEM CONTROLLER 1		1.861.763.00
P-ADDR07			4	1	14	22B				SYSTEM CONTROLLER 1		1.861.763.00
P-ADDR08			4	1	14	22C				SYSTEM CONTROLLER 1		1.861.763.00
P-ADDR09			4	1	14	23A				SYSTEM CONTROLLER 1		1.861.763.00
P-ADDR10			4	1	14	23B				SYSTEM CONTROLLER 1		1.861.763.00
P-ADDR11			4	1	14	23C				SYSTEM CONTROLLER 1		1.861.763.00
P-ADDR20			4	1	15	20A				SYSTEM CONTROLLER 2		1.861.763.00
P-ADDR21			4	1	15	20B				SYSTEM CONTROLLER 2		1.861.763.00
P-ADDR22			4	1	15	20C				SYSTEM CONTROLLER 2		1.861.763.00
P-ADDR23			4	1	15	21A				SYSTEM CONTROLLER 2		1.861.763.00
P-ADDR24			4	1	15	21B				SYSTEM CONTROLLER 2		1.861.763.00
P-ADDR25			4	1	15	21C				SYSTEM CONTROLLER 2		1.861.763.00
P-ADDR26			4	1	15	22A				SYSTEM CONTROLLER 2		1.861.763.00
P-ADDR27			4	1	15	22B				SYSTEM CONTROLLER 2		1.861.763.00
P-ADDR28			4	1	15	22C				SYSTEM CONTROLLER 2		1.861.763.00
P-ADDR29			4	1	15	23A				SYSTEM CONTROLLER 2		1.861.763.00
P-ADDR30			4	1	15	23B				SYSTEM CONTROLLER 2		1.861.763.00
P-ADDR31			4	1	15	23C				SYSTEM CONTROLLER 2		1.861.763.00
P-DATA0			4	1	14	12A				SYSTEM CONTROLLER 1		1.861.763.00
P-DATA02			4	1	15	12A				SYSTEM CONTROLLER 2		1.861.763.00
P-DATA1			4	1	14	12B				SYSTEM CONTROLLER 1		1.861.763.00
P-DATA12			4	1	15	12B				SYSTEM CONTROLLER 2		1.861.763.00
P-DATA2			4	1	14	12C				SYSTEM CONTROLLER 1		1.861.763.00
P-DATA22			4	1	15	12C				SYSTEM CONTROLLER 2		1.861.763.00
P-DATA3			4	1	14	13A				SYSTEM CONTROLLER 1		1.861.763.00
P-DATA32			4	1	15	13A				SYSTEM CONTROLLER 2		1.861.763.00
P-DATA4			4	1	14	13B				SYSTEM CONTROLLER 1		1.861.763.00
P-DATA42			4	1	15	13B				SYSTEM CONTROLLER 2		1.861.763.00

WILLI STUDER AG * S I G N A L W I R E L I S T * 86/12/08 * 10:54 * P A G E 153 *
1.861.022.00 D820X PCM RECORDER * 86/08/27 - 00 *

SIGNAL NAME	COLOR	MI	ASY	GRP	ELM	PNT	S	LV	TYPE	DESCRIPTION OF ELEMENT	REMARK	ELEMENT NR.
P-DATA5			4	1	14	13C				SYSTEM CONTROLLER 1		1.861.763.00
P-DATA52			4	1	15	13C				SYSTEM CONTROLLER 2		1.861.763.00
P-DATA6			4	1	14	14A				SYSTEM CONTROLLER 1		1.861.763.00
P-DATA62			4	1	15	14A				SYSTEM CONTROLLER 2		1.861.763.00
P-DATA7			4	1	14	14B				SYSTEM CONTROLLER 1		1.861.763.00
P-DATA72			4	1	15	14B				SYSTEM CONTROLLER 2		1.861.763.00
P-EN			4	1	14	15A				SYSTEM CONTROLLER 1		1.861.763.00
P-EN2			4	1	15	15A				SYSTEM CONTROLLER 2		1.861.763.00
P-INMI			4	1	14	16A				SYSTEM CONTROLLER 1		1.861.763.00
P-INMI2			4	1	15	16A				SYSTEM CONTROLLER 2		1.861.763.00
P-IN2			4 4	1 1	14 15	16C 16C				SYSTEM CONTROLLER 1 SYSTEM CONTROLLER 2		1.861.763.00 1.861.763.00
P-IRES			4	1	14	15C				SYSTEM CONTROLLER 1		1.861.763.00
P-IRES2			4	1	15	15C				SYSTEM CONTROLLER 2		1.861.763.00
P-ISEL0			4	1	14	24A				SYSTEM CONTROLLER 1		1.861.763.00
P-ISEL02			4	1	15	24A				SYSTEM CONTROLLER 2		1.861.763.00
P-ISEL1			4	1	14	24B				SYSTEM CONTROLLER 1		1.861.763.00
P-ISEL12			4	1	15	24B				SYSTEM CONTROLLER 2		1.861.763.00
P-ISEL2			4	1	14	24C				SYSTEM CONTROLLER 1		1.861.763.00
P-ISEL22			4	1	15	24C				SYSTEM CONTROLLER 2		1.861.763.00
P-ISEL3			4	1	14	25A				SYSTEM CONTROLLER 1		1.861.763.00
P-ISEL32			4	1	15	25A				SYSTEM CONTROLLER 2		1.861.763.00
P-OUT1			4	1	14	17A				SYSTEM CONTROLLER 1		1.861.763.00
P-OUT12			4	1	15	17A				SYSTEM CONTROLLER 2		1.861.763.00
P-OUT2			4	1	14	17B				SYSTEM CONTROLLER 1		1.861.763.00
P-OUT22			4	1	15	17B				SYSTEM CONTROLLER 2		1.861.763.00
P-RW			4	1	14	15B				SYSTEM CONTROLLER 1		1.861.763.00
P-RW2			4	1	15	15B				SYSTEM CONTROLLER 2		1.861.763.00

PUBLISHED: 12/86

WILLI STUDER AG * SIGNAL WIRE LIST * 86/12/08 * 10:54 * PAGE 154

1.861.022.00 D820X PCM RECORDER * 86/08/27 - 00

SIGNAL NAME	COLOR	MI	ASY	GRP	ELM	PNT	S	LV	TYPE	DESCRIPTION OF ELEMENT	REMARK	ELEMENT NR.
PBITR1			1	73	1	10				BOX-RACK 1 (RACK) (25 PIN D-SUB)		1.861.583.00
			1	80	6	4A				ANALOG ROUTING		1.861.814.00
			1	80	12	10				RACK-CAGE (25 PIN D-SUB)		
			1	80	14	10				BOX-RACK 1 TO REAR PANEL TO		
			2	1	3	10				BACKPANEL RACK (D-SUB 25P)		1.861.895.00
			2	1	7	18C				PLAYBACK AMPLIFIER		1.861.801.00
			4	1	12	10B				RT/TC CODEC		1.861.861.00
			4	1	17	10				CONNECTOR 2 (BACKPANEL RACK 1)		
			4	1	50	10				BOX-RACK 1 CONNECTOR (CABLE)		
PBITR11			1	80	3	4C				PDM DEMODULATOR 1		1.861.812.00
			1	80	12	12				RACK-CAGE (25 PIN D-SUB)		
			2	1	3	12				BACKPANEL RACK (D-SUB 25P)		1.861.895.00
			2	1	7	20C				PLAYBACK AMPLIFIER		1.861.801.00
PBITR12			1	80	3	8C				PDM DEMODULATOR 1		1.861.812.00
			1	80	4	4C				PDM DEMODULATOR 2		1.861.812.00
			1	80	12	13				RACK-CAGE (25 PIN D-SUB)		
			2	1	3	13				BACKPANEL RACK (D-SUB 25P)		1.861.895.00
			2	1	7	21C				PLAYBACK AMPLIFIER		1.861.801.00
PBITR2			1	73	1	11				BOX-RACK 1 (RACK) (25 PIN D-SUB)		1.861.583.00
			1	80	12	11				RACK-CAGE (25 PIN D-SUB)		
			1	80	14	11				BOX-RACK 1 TO REAR PANEL TO		
			2	1	3	11				BACKPANEL RACK (D-SUB 25P)		1.861.895.00
			2	1	7	19C				PLAYBACK AMPLIFIER		1.861.801.00
			4	1	12	8B				RT/TC CODEC		1.861.861.00
			4	1	17	11				CONNECTOR 2 (BACKPANEL RACK 1)		
			4	1	50	11				BOX-RACK 1 CONNECTOR (CABLE)		
PBTR1			1	73	1	23				BOX-RACK 1 (RACK) (25 PIN D-SUB)		1.861.583.00
			1	80	12	22				RACK-CAGE (25 PIN D-SUB)		
			1	80	14	23				BOX-RACK 1 TO REAR PANEL TO		
			2	1	3	22				BACKPANEL RACK (D-SUB 25P)		1.861.895.00
			2	1	7	18A				PLAYBACK AMPLIFIER		1.861.801.00
			4	1	12	10A				RT/TC CODEC		1.861.861.00
			4	1	17	23				CONNECTOR 2 (BACKPANEL RACK 1)		
			4	1	50	23				BOX-RACK 1 CONNECTOR (CABLE)		
PBTR10			2	1	4	4A				DETECTOR		1.861.804.00
			2	1	7	4C				PLAYBACK AMPLIFIER		1.861.801.00
PBTR11			1	80	3	4A				PDM DEMODULATOR 1		1.861.812.00
			1	80	12	24				RACK-CAGE (25 PIN D-SUB)		
			2	1	3	24				BACKPANEL RACK (D-SUB 25P)		1.861.895.00
			2	1	7	20A				PLAYBACK AMPLIFIER		1.861.801.00
PBTR12			1	80	3	8A				PDM DEMODULATOR 1		1.861.812.00
			1	80	4	4A				PDM DEMODULATOR 2		1.861.812.00
			1	80	12	25				RACK-CAGE (25 PIN D-SUB)		
			2	1	3	25				BACKPANEL RACK (D-SUB 25P)		1.861.895.00
			2	1	7	21A				PLAYBACK AMPLIFIER		1.861.801.00

WILLI STUDER AG * SIGNAL WIRE LIST * 86/12/08 * 10:54 * PAGE 155

1.861.022.00 D820X PCM RECORDER * 86/08/27 - 00

SIGNAL NAME	COLOR	MI	ASY	GRP	ELM	PNT	S	LV	TYPE	DESCRIPTION OF ELEMENT	REMARK	ELEMENT NR.
PBTR2			1	73	1	24				BOX-RACK 1 (RACK) (25 PIN D-SUB)		1.861.583.00
			1	80	12	23				RACK-CAGE (25 PIN D-SUB)		
			1	80	14	24				BOX-RACK 1 TO REAR PANEL TO		
			2	1	3	23				BACKPANEL RACK (D-SUB 25P)		1.861.895.00
			2	1	7	19A				PLAYBACK AMPLIFIER		1.861.801.00
			4	1	12	8A				RT/TC CODEC		1.861.861.00
			4	1	17	24				CONNECTOR 2 (BACKPANEL RACK 1)		
			4	1	50	24				BOX-RACK 1 CONNECTOR (CABLE)		
PBTR3			2	1	4	1C				DETECTOR		1.861.804.00
			2	1	7	1A				PLAYBACK AMPLIFIER		1.861.801.00
PBTR4			2	1	4	1A				DETECTOR		1.861.804.00
			2	1	7	1C				PLAYBACK AMPLIFIER		1.861.801.00
PBTR5			2	1	4	2C				DETECTOR		1.861.804.00
			2	1	7	2A				PLAYBACK AMPLIFIER		1.861.801.00
PBTR6			2	1	4	2A				DETECTOR		1.861.804.00
			2	1	7	2C				PLAYBACK AMPLIFIER		1.861.801.00
PBTR7			2	1	4	3C				DETECTOR		1.861.804.00
			2	1	7	3A				PLAYBACK AMPLIFIER		1.861.801.00
PBTR8			2	1	4	3A				DETECTOR		1.861.804.00
			2	1	7	3C				PLAYBACK AMPLIFIER		1.861.801.00
PBTR9			2	1	4	4C				DETECTOR		1.861.804.00
			2	1	7	4A				PLAYBACK AMPLIFIER		1.861.801.00
PDBCLK			1	73	1	16				BOX-RACK 1 (RACK) (25 PIN D-SUB)		1.861.583.00
			1	80	1	11A				CUE/PC DELAY		1.861.816.00
			1	80	14	16				BOX-RACK 1 TO REAR PANEL TO		
			4	1	5	21C				DAPRC INTERFACE		1.861.854.00
			4	1	17	16				CONNECTOR 2 (BACKPANEL RACK 1)		
			4	1	50	16				BOX-RACK 1 CONNECTOR (CABLE)		
PDCLK3			1	73	1	13				BOX-RACK 1 (RACK) (25 PIN D-SUB)		1.861.583.00
			1	80	1	2A				CUE/PC DELAY		1.861.816.00
			1	80	14	13				BOX-RACK 1 TO REAR PANEL TO		
			4	1	13	22A				TIMING + TEST		1.861.862.00
			4	1	17	13				CONNECTOR 2 (BACKPANEL RACK 1)		
			4	1	50	13				BOX-RACK 1 CONNECTOR (CABLE)		
PDDATA			1	73	1	18				BOX-RACK 1 (RACK) (25 PIN D-SUB)		1.861.583.00
			1	80	1	13A				CUE/PC DELAY		1.861.816.00
			1	80	14	18				BOX-RACK 1 TO REAR PANEL TO		
			4	1	5	20B				DAPRC INTERFACE		1.861.854.00
			4	1	17	18				CONNECTOR 2 (BACKPANEL RACK 1)		
			4	1	50	18				BOX-RACK 1 CONNECTOR (CABLE)		
PDIBCLK			1	73	1	3				BOX-RACK 1 (RACK) (25 PIN D-SUB)		1.861.583.00
			1	80	1	11C				CUE/PC DELAY		1.861.816.00
			1	80	14	3				BOX-RACK 1 TO REAR PANEL TO		
			4	1	5	22A				DAPRC INTERFACE		1.861.854.00

./.

PUBLISHED: 12/86

* WILLI STUDER AG * S I G N A L W I R E L I S T * 86/12/08 * 10:54 * P A G E 156 *

* 1.861.022.00 D820X PCM RECORDER * 86/08/27 - 00 *

SIGNAL NAME	COLOR	MI	ASY	GRP	ELM	PNT	S	LV	TYPE	DESCRIPTION OF ELEMENT	REMARK	ELEMENT NR.
<<-- CONT.OF			4	1	17	3				CONNECTOR 2 (BACKPANEL RACK 1)		
PCIBCLK			4	1	50	3				BOX-RACK 1 CONNECTOR (CABLE)		
PCICLK3			1	73	1	12				BOX-RACK 1 (RACK) (25 PIN D-SUB)		1.861.583.00
			1	8C	1	2C				CUE/PC DELAY		1.861.816.00
			1	8Q	14	12				BOX-RACK 1 TO REAR PANEL TO		
			4	1	13	22B				TIMING + TEST		1.861.862.00
			4	1	17	12				CONNECTOR 2 (BACKPANEL RACK 1)		
			4	1	50	12				BOX-RACK 1 CONNECTOR (CABLE)		
PDIDATA			1	73	1	5				BOX-RACK 1 (RACK) (25 PIN D-SUB)		1.861.583.00
			1	8C	1	13C				CUE/PC DELAY		1.861.816.00
			1	8Q	14	5				BOX-RACK 1 TO REAR PANEL TO		
			4	1	5	2CC				DAPRO INTERFACE		1.861.854.00
			4	1	17	5				CONNECTOR 2 (BACKPANEL RACK 1)		
			4	1	50	5				BOX-RACK 1 CONNECTOR (CABLE)		
PDIWCLK			1	73	1	4				BOX-RACK 1 (RACK) (25 PIN D-SUB)		1.861.583.00
			1	8C	1	12C				CUE/PC DELAY		1.861.816.00
			1	8Q	14	4				BOX-RACK 1 TO REAR PANEL TO		
			4	1	5	21B				DAPRO INTERFACE		1.861.854.00
			4	1	17	4				CONNECTOR 2 (BACKPANEL RACK 1)		
			4	1	50	4				BOX-RACK 1 CONNECTOR (CABLE)		
PDWCLK			1	73	1	17				BOX-RACK 1 (RACK) (25 PIN D-SUB)		1.861.583.00
			1	8D	1	12A				CUE/PC DELAY		1.861.816.00
			1	8Q	14	17				BOX-RACK 1 TO REAR PANEL TO		
			4	1	5	21A				DAPRO INTERFACE		1.861.854.00
			4	1	17	17				CONNECTOR 2 (BACKPANEL RACK 1)		
			4	1	50	17				BOX-RACK 1 CONNECTOR (CABLE)		
PHOCON			2	4	2	2				INTERNAL PHONE CONNECTOR J2 (CIS)		1.861.807.00
			2	6	1	6				INTERNAL PHONE PLUG (SOLD.)		54.24C.102.00
PHOGND	4		3	3	4	6				AUDIO PHONES PLUG (CIS 6P) J2		1.861.746.00
	4		3	6	1	6				PHONES PLUG		54.24.0102
PHOL	9		3	3	4	4				AUDIO PHONES PLUG (CIS 6P) J2		1.861.746.00
	9		3	6	1	4				PHONES PLUG		54.24.0102
PHOR	2		3	3	4	5				AUDIO PHONES PLUG (CIS 6P) J2		1.861.746.00
	2		3	6	1	5				PHONES PLUG		54.24.0102
PHOSELA			1	8Q	6	28A				ANALOG ROUTING		1.861.814.00
			1	8Q	7	28C				PDM CONTROL		1.861.813.00
PHOSELB			1	8Q	6	28C				ANALOG ROUTING		1.861.814.00
			1	8Q	7	28A				PDM CONTROL		1.861.813.00
PHOSW	5		3	3	4	2				AUDIO PHONES PLUG (CIS 6P) J2		1.861.746.00
	5		3	6	1	2				PHONES PLUG		54.24.0102
PRIMV-1	0		11	9	1	1			Y	PRIMARY 1		1.820.521.00
	0		11	9	1	4			Y	PRIMARY 1		1.820.521.00

* WILLI STUDER AG * S I G N A L W I R E L I S T * 86/12/08 * 10:54 * P A G E 157 *

* 1.861.022.00 D820X PCM RECORDER * 86/08/27 - 00 *

SIGNAL NAME	COLOR	MI	ASY	GRP	ELM	PNT	S	LV	TYPE	DESCRIPTION OF ELEMENT	REMARK	ELEMENT NR.
PRIMV-2	1		11	5	1	2			L	FUSE HOLDER, F01		53.03.0106
	1		11	6	1	1A			K	DISTRIBUTOR		
	1		11	6	1	1C			K	DISTRIBUTOR		
	1		11	6	1	1D			K	DISTRIBUTOR		
	1		11	7	1	1			J	VOLTAGE SELECTOR S01		55.12.0001
	1		11	9	1	2			Y	PRIMARY 1		1.820.521.00
PRIMV-3	2		11	6	1	2A			K	DISTRIBUTOR		
	2		11	6	1	2C			K	DISTRIBUTOR		
	2		11	6	1	2D			K	DISTRIBUTOR		
	2		11	7	1	2			J	VOLTAGE SELECTOR S01		55.12.0001
	2		11	7	2	1			J	VOLTAGE SELECTOR S02		55.12.0001
	2		11	9	1	3			Y	PRIMARY 1		1.820.521.00
PRIMV-5	3		11	6	1	3A			K	DISTRIBUTOR		
	3		11	6	1	3C			K	DISTRIBUTOR		
	3		11	6	1	3D			K	DISTRIBUTOR		
	3		11	7	1	3			J	VOLTAGE SELECTOR S01		55.12.0001
	3		11	7	2	3			J	VOLTAGE SELECTOR S02		55.12.0001
	3		11	9	2	5			Y	PRIMARY 2		1.820.522.00
PRIMV-6	0		11	9	2	6			Y	PRIMARY 2		1.820.522.00
	0		11	9	2	7			Y	PRIMARY 2		1.820.522.00
PRIMW-1	0		11	8	1	1			Y	PRIMARY 1		1.820.521.00
	0		11	8	1	4			Y	PRIMARY 1		1.820.521.00
PRIMW-2	1		11	5	2	2			L	FUSE HOLDER, F02		53.03.0106
	5		11	6	1	5A			K	DISTRIBUTOR		
	5		11	6	1	5C			K	DISTRIBUTOR		
	5		11	6	1	5D			K	DISTRIBUTOR		
	5		11	7	3	1			J	VOLTAGE SELECTOR S03		55.12.0001
	5		11	8	1	2			Y	PRIMARY 1		1.820.521.00
PRIMW-3	6		11	6	1	6A			K	DISTRIBUTOR		
	6		11	6	1	6C			K	DISTRIBUTOR		
	6		11	6	1	6D			K	DISTRIBUTOR		
	6		11	7	2	2			J	VOLTAGE SELECTOR S02		55.12.0001
	6		11	7	3	2			J	VOLTAGE SELECTOR S03		55.12.0001
	6		11	8	1	3			Y	PRIMARY 1		1.820.521.00
PRIMW-5	7		11	6	1	7A			K	DISTRIBUTOR		
	7		11	6	1	7C			K	DISTRIBUTOR		
	7		11	6	1	7D			K	DISTRIBUTOR		
	7		11	7	2	4			J	VOLTAGE SELECTOR S02		55.12.0001
	7		11	7	3	3			J	VOLTAGE SELECTOR S03		55.12.0001
	7		11	8	2	5			Y	PRIMARY 2		1.820.522.00
PRIMW-6	0		11	8	2	6			Y	PRIMARY 2		1.820.522.00
	0		11	8	2	7			Y	PRIMARY 2		1.820.522.00
PULLUP11			4	1	5	18C				DAPRO INTERFACE		1.861.854.00
PULLUP12			4	1	5	29C				DAPRO INTERFACE		1.861.854.00
PULLUP9			4	1	7	1CC				COEFFICIENT GENERATOR		1.861.856.00

PUBLISHED: 12/86

WILLI STUDER AG * S I G N A L W I R E L I S T * 86/12/08 * 10:54 * P A G E 158

1.861.022.00 D820X PCM RECORDER * 86/08/27 - 00

SIGNAL NAME	COLOR	MI	ASY	GRP	ELM	PNT	S	LV	TYPE	DESCRIPTION OF ELEMENT		REMARK	ELEMENT NR.
PWMPL-H1			11	20	1	9				SPOOLING MOTOR DRIVE AMP. LEFT	P01		
			11	20	40	28				SPOOLING MOTOR DRIVER	J01		1.820.759.00
			11	33	2	9				FROM GRP20. ELM01	P01		
PWMPL-H2			11	20	1	10				SPOOLING MOTOR DRIVE AMP. LEFT	P01		
			11	20	40	34				SPOOLING MOTOR DRIVER	J01		1.820.759.00
			11	33	2	10				FROM GRP20. ELM01	P01		
PWMPL-L1			11	20	1	7				SPOOLING MOTOR DRIVE AMP. LEFT	P01		
			11	20	40	35				SPOOLING MOTOR DRIVER	J01		1.820.759.00
			11	33	2	7				FROM GRP20. ELM01	P01		
PWMPL-L2			11	20	1	8				SPOOLING MOTOR DRIVE AMP. LEFT	P01		
			11	33	2	8				FROM GRP20. ELM01	P01		
PWMPL-L3			11	20	1	11				SPOOLING MOTOR DRIVE AMP. LEFT	P01		
			11	20	40	29				SPOOLING MOTOR DRIVER	J01		1.820.759.00
			11	33	2	11				FROM GRP20. ELM01	P01		
PWMPL-L4			11	20	1	12				SPOOLING MOTOR DRIVE AMP. LEFT	P01		
			11	20	40	33				SPOOLING MOTOR DRIVER	J01		1.820.759.00
			11	33	2	12				FROM GRP20. ELM01	P01		
PWMPL-L5			11	20	1	14				SPOOLING MOTOR DRIVE AMP. LEFT	P01		
			11	20	40	32				SPOOLING MOTOR DRIVER	J01		1.820.759.00
			11	33	2	14				FROM GRP20. ELM01	P01		
PWMPL-L6			11	20	1	15				SPOOLING MOTOR DRIVE AMP. LEFT	P01		
			11	20	40	31				SPOOLING MOTOR DRIVER	J01		1.820.759.00
			11	33	2	15				FROM GRP20. ELM01	P01		
PWMPR-H1			11	20	2	9				SPOOLING MOTOR DRIVE AMP. RIGHT	P02		
			11	20	40	7				SPOOLING MOTOR DRIVER	J01		1.820.759.00
			11	30	2	9				FROM GRP20. ELM02	P01		
PWMPR-H2			11	20	2	10				SPOOLING MOTOR DRIVE AMP. RIGHT	P02		
			11	20	40	38				SPOOLING MOTOR DRIVER	J01		1.820.759.00
			11	30	2	10				FROM GRP20. ELM02	P01		
PWMPR-L1			11	20	2	7				SPOOLING MOTOR DRIVE AMP. RIGHT	P02		
			11	20	40	35				SPOOLING MOTOR DRIVER	J01		1.820.759.00
			11	30	2	7				FROM GRP20. ELM02	P01		
PWMPR-L2			11	20	2	8				SPOOLING MOTOR DRIVE AMP. RIGHT	P02		
			11	30	2	8				FROM GRP20. ELM02	P01		
PWMPR-L3			11	20	2	11				SPOOLING MOTOR DRIVE AMP. RIGHT	P02		
			11	20	40	8				SPOOLING MOTOR DRIVER	J01		1.820.759.00
			11	30	2	11				FROM GRP20. ELM02	P01		
PWMPR-L4			11	20	2	12				SPOOLING MOTOR DRIVE AMP. RIGHT	P02		
			11	20	40	37				SPOOLING MOTOR DRIVER	J01		1.820.759.00
			11	30	2	12				FROM GRP20. ELM02	P01		

WILLI STUDER AG * S I G N A L W I R E L I S T * 86/12/08 * 10:54 * P A G E 159

1.861.022.00 D820X PCM RECORDER * 86/08/27 - 00

SIGNAL NAME	COLOR	MI	ASY	GRP	ELM	PNT	S	LV	TYPE	DESCRIPTION OF ELEMENT		REMARK	ELEMENT NR.
PWMPR-L5			11	20	2	14				SPOOLING MOTOR DRIVE AMP. RIGHT	P02		
			11	20	40	36				SPOOLING MOTOR DRIVER	J01		1.820.759.00
			11	30	2	14				FROM GRP20. ELM02	P01		
PWMPR-L6			11	20	2	15				SPOOLING MOTOR DRIVE AMP. RIGHT	P02		
			11	20	40	10				SPOOLING MOTOR DRIVER	J01		1.820.759.00
			11	30	2	15				FROM GRP20. ELM02	P01		
PWROK			4	1	14	16B				SYSTEM CONTROLLER 1			1.861.763.00
			4	1	15	16B				SYSTEM CONTROLLER 2			1.861.763.00
			4	1	23	12A				POWER SUPPLY			1.861.515.00
RCV-232			11	20	50	9				SMPTE/EBU INTERFACE	J11		1.820.751.00
RDHD101			5	1	2	23				READ HEAD INTERCONNECTION (FLEXI)			1.116.861.20
			5	3	3	1				CONNECTOR ODD TRACKS (AMP12)			1.861.805.00
RDHD102			5	1	2	24				READ HEAD INTERCONNECTION (FLEXI)			1.116.861.20
			5	3	3	2				CONNECTOR ODD TRACKS (AMP12)			1.861.805.00
RDHD103			5	1	2	21				READ HEAD INTERCONNECTION (FLEXI)			1.116.861.20
			5	3	3	3				CONNECTOR ODD TRACKS (AMP12)			1.861.805.00
RDHD104			5	1	2	22				READ HEAD INTERCONNECTION (FLEXI)			1.116.861.20
			5	3	3	4				CONNECTOR ODD TRACKS (AMP12)			1.861.805.00
RDHD105			5	1	2	19				READ HEAD INTERCONNECTION (FLEXI)			1.116.861.20
			5	3	3	5				CONNECTOR ODD TRACKS (AMP12)			1.861.805.00
RDHD106			5	1	2	20				READ HEAD INTERCONNECTION (FLEXI)			1.116.861.20
			5	3	3	6				CONNECTOR ODD TRACKS (AMP12)			1.861.805.00
RDHD107			5	1	2	17				READ HEAD INTERCONNECTION (FLEXI)			1.116.861.20
			5	3	3	7				CONNECTOR ODD TRACKS (AMP12)			1.861.805.00
RDHD108			5	1	2	18				READ HEAD INTERCONNECTION (FLEXI)			1.116.861.20
			5	3	3	8				CONNECTOR ODD TRACKS (AMP12)			1.861.805.00
RDHD109			5	1	2	15				READ HEAD INTERCONNECTION (FLEXI)			1.116.861.20
			5	3	3	9				CONNECTOR ODD TRACKS (AMP12)			1.861.805.00
RDHD110			5	1	2	16				READ HEAD INTERCONNECTION (FLEXI)			1.116.861.20
			5	3	3	10				CONNECTOR ODD TRACKS (AMP12)			1.861.805.00
RDHD111			5	1	2	13				READ HEAD INTERCONNECTION (FLEXI)			1.116.861.20
			5	3	3	11				CONNECTOR ODD TRACKS (AMP12)			1.861.805.00
RDHD112			5	1	2	14				READ HEAD INTERCONNECTION (FLEXI)			1.116.861.20
			5	3	3	12				CONNECTOR ODD TRACKS (AMP12)			1.861.805.00
RDHD201			5	1	2	11				READ HEAD INTERCONNECTION (FLEXI)			1.116.861.20
			5	3	2	1				CONNECTOR EVEN TRACKS (AMP12)			1.861.805.00
RDHD202			5	1	2	12				READ HEAD INTERCONNECTION (FLEXI)			1.116.861.20
			5	3	2	2				CONNECTOR EVEN TRACKS (AMP12)			1.861.805.00

PUBLISHED: 12/86

* WILLI STUDER AG * S I G N A L W I R E L I S T * 86/12/08 * 10:54 * P A G E 160 *

* 1.861.022.00 D820X PCM RECORDER * 86/08/27 - 00 *

SIGNAL NAME	COLOR	MI	ASY	GRP	ELM	PNT	S	LV	TYPE	DESCRIPTION OF ELEMENT		REMARK	ELEMENT NR.
RDH0203			5	1	2	9				READ HEAD INTERCONNECTION (FLEXI)			1.116.861.20
			5	3	2	3				CONNECTOR EVEN TRACKS (AMP12)			1.861.805.00
RDH0204			5	1	2	10				READ HEAD INTERCONNECTION (FLEXI)			1.116.861.20
			5	3	2	4				CONNECTOR EVEN TRACKS (AMP12)			1.861.805.00
RDH0205			5	1	2	7				READ HEAD INTERCONNECTION (FLEXI)			1.116.861.20
			5	3	2	5				CONNECTOR EVEN TRACKS (AMP12)			1.861.805.00
RDH0206			5	1	2	8				READ HEAD INTERCONNECTION (FLEXI)			1.116.861.20
			5	3	2	6				CONNECTOR EVEN TRACKS (AMP12)			1.861.805.00
RDH0207			5	1	2	5				READ HEAD INTERCONNECTION (FLEXI)			1.116.861.20
			5	3	2	7				CONNECTOR EVEN TRACKS (AMP12)			1.861.805.00
RDH0208			5	1	2	6				READ HEAD INTERCONNECTION (FLEXI)			1.116.861.20
			5	3	2	8				CONNECTOR EVEN TRACKS (AMP12)			1.861.805.00
RDH0209			5	1	2	3				READ HEAD INTERCONNECTION (FLEXI)			1.116.861.20
			5	3	2	9				CONNECTOR EVEN TRACKS (AMP12)			1.861.805.00
RDH0210			5	1	2	4				READ HEAD INTERCONNECTION (FLEXI)			1.116.861.20
			5	3	2	10				CONNECTOR EVEN TRACKS (AMP12)			1.861.805.00
RDH0211			5	1	2	1				READ HEAD INTERCONNECTION (FLEXI)			1.116.861.20
			5	3	2	11				CONNECTOR EVEN TRACKS (AMP12)			1.861.805.00
RDH0212			5	1	2	2				READ HEAD INTERCONNECTION (FLEXI)			1.116.861.20
			5	3	2	12				CONNECTOR EVEN TRACKS (AMP12)			1.861.805.00
RECEIVA			11	20	31	6				TO GRP25, ELM04/C5	P21		
			11	20	50	6				SMPTE/EBU INTERFACE	J11		1.820.751.00
			11	25	4	8			B	CONNECTOR SMPTE/EBU BUS	J04		
			11	25	5	8			B	CONNECTOR SMPTE/EBU BUS	J05		
RECEIVB			11	20	31	5				TO GRP25, ELM04/D5	P21		
			11	20	50	5				SMPTE/EBU INTERFACE	J11		1.820.751.00
			11	25	4	3			B	CONNECTOR SMPTE/EBU BUS	J04		
			11	25	5	3			B	CONNECTOR SMPTE/EBU BUS	J05		
RECEIVCM			11	20	31	7				TO GRP25, ELM04/D5	P21		
			11	20	50	7				SMPTE/EBU INTERFACE	J11		1.820.751.00
			11	25	4	4			B	CONNECTOR SMPTE/EBU BUS	J04		
			11	25	5	4			B	CONNECTOR SMPTE/EBU BUS	J05		
RESHPG1			4	1	10	11C				TRANSFORMATTER			1.861.859.00
			4	1	12	11C				RT/TC CODEC			1.861.861.00
RESHPG2			4	1	10	12A				TRANSFORMATTER			1.861.859.00
			4	1	12	12A				RT/TC CODEC			1.861.861.00
RES1			1	80	1	19C				CUE/PQ DELAY			1.861.816.00
			1	80	2	19A				PDM MODULATOR			1.861.811.00

* WILLI STUDER AG * S I G N A L W I R E L I S T * 86/12/08 * 10:54 * P A G E 161 *

* 1.861.022.00 D820X PCM RECORDER * 86/08/27 - 00 *

SIGNAL NAME	COLOR	MI	ASY	GRP	ELM	PNT	S	LV	TYPE	DESCRIPTION OF ELEMENT	REMARK	ELEMENT NR.
RES10			1	80	3	24A				PDM DEMODULATOR 1		1.861.812.00
			1	80	4	24C				PDM DEMODULATOR 2		1.861.812.00
			4	1	4	26B				GAINS CONTROL		1.861.853.00
RES11			1	80	3	24C				PDM DEMODULATOR 1		1.861.812.00
			1	80	4	24A				PDM DEMODULATOR 2		1.861.812.00
			4	1	4	26C				GAINS CONTROL		1.861.853.00
RES12			1	80	3	25A				PDM DEMODULATOR 1		1.861.812.00
			1	80	4	25C				PDM DEMODULATOR 2		1.861.812.00
			4	1	4	29B				GAINS CONTROL		1.861.853.00
RES13			1	80	3	25C				PDM DEMODULATOR 1		1.861.812.00
			1	80	4	25A				PDM DEMODULATOR 2		1.861.812.00
RES14			1	80	3	26A				PDM DEMODULATOR 1		1.861.812.00
			1	80	4	26C				PDM DEMODULATOR 2		1.861.812.00
RES15			1	80	3	26C				PDM DEMODULATOR 1		1.861.812.00
			1	80	4	26A				PDM DEMODULATOR 2		1.861.812.00
			4	1	6	4A				DATA PROCESSOR		1.861.855.00
			4	1	7	4A				COEFFICIENT GENERATOR		1.861.856.00
RES16			1	80	3	21A				PDM DEMODULATOR 1		1.861.812.00
			1	80	4	21A				PDM DEMODULATOR 2		1.861.812.00
			1	80	7	21A				PDM CONTROL		1.861.813.00
			4	1	6	4B				DATA PROCESSOR		1.861.855.00
			4	1	7	4B				COEFFICIENT GENERATOR		1.861.856.00
RES17			1	80	3	21C				PDM DEMODULATOR 1		1.861.812.00
			1	80	4	21C				PDM DEMODULATOR 2		1.861.812.00
			1	80	7	21C				PDM CONTROL		1.861.813.00
			4	1	6	4C				DATA PROCESSOR		1.861.855.00
			4	1	7	4C				COEFFICIENT GENERATOR		1.861.856.00
RES18			1	80	6	27C				ANALOG ROUTING		1.861.814.00
			1	80	7	27A				PDM CONTROL		1.861.813.00
			4	1	6	7A				DATA PROCESSOR		1.861.855.00
			4	1	7	7A				COEFFICIENT GENERATOR		1.861.856.00
RES19			1	80	6	27A				ANALOG ROUTING		1.861.814.00
			1	80	7	27C				PDM CONTROL		1.861.813.00
			4	1	6	7B				DATA PROCESSOR		1.861.855.00
			4	1	7	7B				COEFFICIENT GENERATOR		1.861.856.00
RES2			1	80	1	28C				CUE/PQ DELAY		1.861.816.00
			1	80	2	28A				PDM MODULATOR		1.861.811.00
RES20			4	1	6	7C				DATA PROCESSOR		1.861.855.00
			4	1	7	7C				COEFFICIENT GENERATOR		1.861.856.00
RES21			4	1	6	8A				DATA PROCESSOR		1.861.855.00
			4	1	7	8A				COEFFICIENT GENERATOR		1.861.856.00
RES22			4	1	7	23C				COEFFICIENT GENERATOR		1.861.856.00
			4	1	9	23C				CODEC MEMORY		1.861.858.00

PUBLISHED: 12/86

WILLI STUDER AG * S I G N A L W I R E L I S T * 86/12/08 * 10:54 * P A G E 162

1.861.022.00 D820X PCM RECORDER * 86/08/27 - 00

SIGNAL NAME	COLOR	MI	ASY	GRP	ELM	PNT	S	LV	TYPE	DESCRIPTION OF ELEMENT	REMARK	ELEMENT NR.
RES3			1	80	1	29C				CUE/PC DELAY		1.861.816.00
			1	80	2	29A				PDM MODULATOR		1.861.811.00
			4	1	4	21C				GAINS CONTROL		1.861.853.00
			4	1	6	21C				DATA PROCESSOR		1.861.855.00
RES4			1	80	1	30C				CUE/PC DELAY		1.861.816.00
			1	80	2	30A				PDM MODULATOR		1.861.811.00
			4	1	4	24A				GAINS CONTROL		1.861.853.00
			4	1	6	22B				DATA PROCESSOR		1.861.855.00
RES5			1	80	2	28C				PDM MODULATOR		1.861.811.00
			1	80	3	28A				PDM DEMODULATOR 1		1.861.812.00
			4	1	4	24B				GAINS CONTROL		1.861.853.00
			4	1	6	24A				DATA PROCESSOR		1.861.855.00
RES6			1	80	2	29C				PDM MODULATOR		1.861.811.00
			1	80	3	29A				PDM DEMODULATOR 1		1.861.812.00
RES7			1	80	2	30C				PDM MODULATOR		1.861.811.00
			1	80	3	30A				PDM DEMODULATOR 1		1.861.812.00
RES8			1	80	3	23A				PDM DEMODULATOR 1		1.861.812.00
			1	80	4	23C				PDM DEMODULATOR 2		1.861.812.00
			4	1	4	25C				GAINS CONTROL		1.861.853.00
RES9			1	80	3	23C				PDM DEMODULATOR 1		1.861.812.00
			1	80	4	23A				PDM DEMODULATOR 2		1.861.812.00
			4	1	4	26A				GAINS CONTROL		1.861.853.00
RPTREND			4	1	11	19B				RUN PROCESSOR		1.861.860.00
RTIOUT			4	1	12	22B				RT/TC CODEC		1.861.861.00
			4	1	19	13				CONNECTOR 4 (TC+AES+BNC)		
			4	1	20	6				CONNECTOR 5 (TC+EXT CLK)		
			4	3	9	3				RT OUTPUT (XLR)		
			4	3	25	7				REFERENCE TIME I/O (CIS)		
RTOUT			4	1	12	22A				RT/TC CODEC		1.861.861.00
			4	1	19	12				CONNECTOR 4 (TC+AES+BNC)		
			4	1	20	19				CONNECTOR 5 (TC+EXT CLK)		
			4	3	9	2				RT OUTPUT (XLR)		
			4	3	25	6				REFERENCE TIME I/O (CIS)		
RTSYNC			4	1	10	8C				TRANSFORMATTER		1.861.859.00
			4	1	12	8C				RT/TC CODEC		1.861.861.00
			4	1	13	9C				TIMING + TEST		1.861.862.00
S-LINE1	1		11	3	1	3			J	POWER SWITCH		
	1		11	4	1	1			Y	LINE FILTER		
	3		11	4	1	2			L	LINE FILTER		
S-LINE2	6		11	3	1	4			J	POWER SWITCH		
	3		11	4	1	12			L	LINE FILTER		
	6		11	4	1	16			Y	LINE FILTER		

WILLI STUDER AG * S I G N A L W I R E L I S T * 86/12/08 * 10:54 * P A G E 163

1.861.022.00 D820X PCM RECORDER * 86/08/27 - 00

SIGNAL NAME	COLOR	MI	ASY	GRP	ELM	PNT	S	LV	TYPE	DESCRIPTION OF ELEMENT	REMARK	ELEMENT NR.
SACLK			1	80	1	17C				CUE/PC DELAY		1.861.816.00
			1	80	2	17A				PDM MODULATOR		1.861.811.00
SAH1			1	80	1	18C				CUE/PC DELAY		1.861.816.00
			1	80	2	18A				PDM MODULATOR		1.861.811.00
SAH2			1	80	1	18A				CUE/PC DELAY		1.861.816.00
			1	80	2	18C				PDM MODULATOR		1.861.811.00
SAMPCLK			4	1	13	4A				TIMING + TEST		1.861.862.00
			4	1	23	10B				POWER SUPPLY		1.861.515.00
SAMPICLK			4	1	13	4B				TIMING + TEST		1.861.862.00
			4	1	23	10C				POWER SUPPLY		1.861.515.00
SBIT0			3	2	3	4				DATA CCP KEYBOARD (FLTCAB. 26P)		1.861.744.00
			3	10	1	4				DATA CCP TRANSCEIV. (FLATCABLE 26P)		1.861.743.00
SBIT1			3	2	3	5				DATA CCP KEYBOARD (FLTCAB. 26P)		1.861.744.00
			3	10	1	5				DATA CCP TRANSCEIV. (FLATCABLE 26P)		1.861.743.00
SBIT2			3	2	3	6				DATA CCP KEYBOARD (FLTCAB. 26P)		1.861.744.00
			3	10	1	6				DATA CCP TRANSCEIV. (FLATCABLE 26P)		1.861.743.00
SBIT3			3	2	3	7				DATA CCP KEYBOARD (FLTCAB. 26P)		1.861.744.00
			3	10	1	7				DATA CCP TRANSCEIV. (FLATCABLE 26P)		1.861.743.00
SBIT4			3	2	3	8				DATA CCP KEYBOARD (FLTCAB. 26P)		1.861.744.00
			3	10	1	8				DATA CCP TRANSCEIV. (FLATCABLE 26P)		1.861.743.00
SBIT5			3	2	3	9				DATA CCP KEYBOARD (FLTCAB. 26P)		1.861.744.00
			3	10	1	9				DATA CCP TRANSCEIV. (FLATCABLE 26P)		1.861.743.00
SBIT6			3	2	3	10				DATA CCP KEYBOARD (FLTCAB. 26P)		1.861.744.00
			3	10	1	10				DATA CCP TRANSCEIV. (FLATCABLE 26P)		1.861.743.00
SBIT7			3	2	3	11				DATA CCP KEYBOARD (FLTCAB. 26P)		1.861.744.00
			3	10	1	11				DATA CCP TRANSCEIV. (FLATCABLE 26P)		1.861.743.00
SBY0			3	2	3	14				DATA CCP KEYBOARD (FLTCAB. 26P)		1.861.744.00
			3	10	1	14				DATA CCP TRANSCEIV. (FLATCABLE 26P)		1.861.743.00
SBY1			3	2	3	13				DATA CCP KEYBOARD (FLTCAB. 26P)		1.861.744.00
			3	10	1	13				DATA CCP TRANSCEIV. (FLATCABLE 26P)		1.861.743.00
SBY2			3	2	3	12				DATA CCP KEYBOARD (FLTCAB. 26P)		1.861.744.00
			3	10	1	12				DATA CCP TRANSCEIV. (FLATCABLE 26P)		1.861.743.00
SECSYN			4	1	4	22C				GAINS CONTROL		1.861.853.00
			4	1	10	13C				TRANSFORMATTER		1.861.859.00
			4	1	10	19B				TRANSFORMATTER		1.861.859.00
			4	1	13	20B				TIMING + TEST		1.861.862.00

PUBLISHED: 12/86

* WILLI STUDER AG * S I G N A L W I R E L I S T * 86/12/08 * 10:54 * P A G E 164 *

* 1.861.022.00 D820X PCM RECORDER * 86/08/27 - 00 *

SIGNAL NAME	COLOR	MI	ASY	GRP	ELM	PNT	S	LV	TYPE	DESCRIPTION OF ELEMENT		REMARK	ELEMENT NR.
SF-LINE1	1		11	4	1	8			Y	LINE FILTER			
	3		11	4	1	9			L	LINE FILTER			
	1		11	4	1	10			Y	LINE FILTER			
	1		11	5	1	1			L	FUSE HOLDER.	F01		53.03.0106
	1		11	5	2	1			L	FUSE HOLDER.	F02		53.03.0106
SF-LINE2	3		11	4	1	19			L	LINE FILTER			
	4		11	4	1	20			Y	LINE FILTER			
	8		11	4	1	21			Y	LINE FILTER			
	4		11	6	1	4A			K	DISTRIBUTOR			
	4		11	6	1	4C			K	DISTRIBUTOR			
	4		11	6	1	4D			K	DISTRIBUTOR			
	3		11	6	1	8A			K	DISTRIBUTOR			
	8		11	6	1	8C			K	DISTRIBUTOR			
	3		11	6	1	8D			K	DISTRIBUTOR			
	4		11	7	1	4			J	VOLTAGE SELECTOR	S01		55.12.0001
	3		11	7	3	4			J	VOLTAGE SELECTOR	S03		55.12.0001
	3		11	8	2	8			Y	PRIMARY 2			1.820.522.00
	4		11	9	2	8			Y	PRIMARY 2			1.820.522.00
SHIELD			11	25	1	1			B	CONN. AUTOLOCATOR. REMOTE TIMER	J01		
			11	26	2	1				TO GRP25. ELM01	P02		
SIGN.GND			11	25	1	8			B	CONN. AUTOLOCATOR. REMOTE TIMER	J01		
			11	26	2	6				TO GRP25. ELM01	P02		
SLR			4	1	10	7C				TRANSFORMATTER			1.861.859.00
			4	1	12	24C				RT/TC CODEC			1.861.861.00
SND-232			11	20	50	14				SMPTE/EBU INTERFACE	J11		1.820.751.00
SPARE			11	20	31	9				TO GRP25. ELM04/05	P21		
			11	25	4	5			B	CONNECTOR SMPTE/EBU BUS	J04		
			11	25	5	5			B	CONNECTOR SMPTE/EBU BUS	J05		
SPARE50			2	1	4	3CC				DETECTOR			1.861.804.00
			2	1	5	30A				WRITE AMPLIFIER			1.861.803.00
SPARE51			2	1	4	24B				DETECTOR			1.861.804.00
			2	1	7	24B				PLAYBACK AMPLIFIER			1.861.801.00
SPARE52			2	1	4	25B				DETECTOR			1.861.804.00
			2	1	7	25B				PLAYBACK AMPLIFIER			1.861.801.00
SPARE53			2	1	4	31A				DETECTOR			1.861.804.00
			2	1	5	31C				WRITE AMPLIFIER			1.861.803.00
SPARE55			4	1	4	20B				GAINS CONTROL			1.861.853.00
			4	1	6	20B				DATA PROCESSOR			1.861.855.00
SPLINIT			4	1	4	21B				GAINS CONTROL			1.861.853.00
			4	1	5	20A				DAPRC INTERFACE			1.861.854.00
			4	1	6	20A				DATA PROCESSOR			1.861.855.00
SR-FADRY			11	25	3	6				CONN. PARALLEL REMOTE CONTROL	J03		
			11	27	4	11				TO CONN. PARALLEL REMOTE CONTR.	P04		

* WILLI STUDER AG * S I G N A L W I R E L I S T * 86/12/08 * 10:54 * P A G E 165 *

* 1.861.022.00 D820X PCM RECORDER * 86/08/27 - 00 *

SIGNAL NAME	COLOR	MI	ASY	GRP	ELM	PNT	S	LV	TYPE	DESCRIPTION OF ELEMENT		REMARK	ELEMENT NR.
SR-FORW			11	25	2	21			B	CONNECTOR SYNCHRONIZER	J02		
			11	25	3	21			B	CONN. PARALLEL REMOTE CONTROL	J03		
			11	27	3	16				TO CONNECTOR SYNCHRONIZER	P03		
			11	27	4	16				TO CONN. PARALLEL REMOTE CONTR.	P04		
SR-LIFT			11	25	2	17			B	CONNECTOR SYNCHRONIZER	J02		
			11	25	3	17			B	CONN. PARALLEL REMOTE CONTROL	J03		
			11	27	3	8				TO CONNECTOR SYNCHRONIZER	P03		
			11	27	4	8				TO CONN. PARALLEL REMOTE CONTR.	P04		
SR-LOCST			11	25	3	18			B	CONN. PARALLEL REMOTE CONTROL	J03		
			11	27	4	10				TO CONN. PARALLEL REMOTE CONTR.	P04		
SR-MUTE			11	25	2	18			B	CONNECTOR SYNCHRONIZER	J02		
			11	27	3	10				TO CONNECTOR SYNCHRONIZER	P03		
SR-PLAY			11	25	2	22			B	CONNECTOR SYNCHRONIZER	J02		
			11	25	3	22			B	CONN. PARALLEL REMOTE CONTROL	J03		
			11	27	3	18				TO CONNECTOR SYNCHRONIZER	P03		
			11	27	4	18				TO CONN. PARALLEL REMOTE CONTR.	P04		
SR-REC			11	25	2	19			B	CONNECTOR SYNCHRONIZER	J02		
			11	25	3	19			B	CONN. PARALLEL REMOTE CONTROL	J03		
			11	27	3	12				TO CONNECTOR SYNCHRONIZER	P03		
			11	27	4	12				TO CONN. PARALLEL REMOTE CONTR.	P04		
SR-REHSL			11	25	2	6			B	CONNECTOR SYNCHRONIZER	J02		
			11	27	3	11				TO CONNECTOR SYNCHRONIZER	P03		
SR-RESET			11	25	3	10			B	CONN. PARALLEL REMOTE CONTROL	J03		
			11	27	4	19				TO CONN. PARALLEL REMOTE CONTR.	P04		
SR-REW			11	25	2	20			B	CONNECTOR SYNCHRONIZER	J02		
			11	25	3	20			B	CONN. PARALLEL REMOTE CONTROL	J03		
			11	27	3	14				TO CONNECTOR SYNCHRONIZER	P03		
			11	27	4	14				TO CONN. PARALLEL REMOTE CONTR.	P04		
SR-STOP			11	25	2	23			B	CONNECTOR SYNCHRONIZER	J02		
			11	25	3	23			B	CONN. PARALLEL REMOTE CONTROL	J03		
			11	27	3	20				TO CONNECTOR SYNCHRONIZER	P03		
			11	27	4	20				TO CONN. PARALLEL REMOTE CONTR.	P04		
SR-VRSPD			11	25	2	5			B	CONNECTOR SYNCHRONIZER	J02		
			11	25	3	5			B	CONN. PARALLEL REMOTE CONTROL	J03		
			11	27	3	9				TO CONNECTOR SYNCHRONIZER	P03		
			11	27	4	9				TO CONN. PARALLEL REMOTE CONTR.	P04		
SR-OLOC			11	25	3	14			B	CONN. PARALLEL REMOTE CONTROL	J03		
			11	27	4	2				TO CONN. PARALLEL REMOTE CONTR.	P04		
SSDACLK			1	73	2	14				BOX-RACK 2 (RACK)	(25 PIN D-SUB)		1.861.583.00
			1	80	15	14				BOX-RACK 2 TO REAR PANEL TO			1.861.583.00
			1	80	22	8				RACK-TAPE DECK (SSDA) (26 PIN FLAT)			
			4	1	14	7A				SYSTEM CONTROLLER 1			1.861.763.00
			4	1	15	7A				SYSTEM CONTROLLER 2			1.861.763.00

./.

PUBLISHED: 12/86

* WILLI STUDER AG * S I G N A L W I R E L I S T * 86/12/08 * 10:54 * P A G E 167 *

* 1.861.022.00 D820X PCM RECORDER * 86/08/27 - 00 *

SIGNAL NAME	COLOR	MI	ASY	GRP	ELM	PNT	S	LV	TYPE	DESCRIPTION OF ELEMENT	REMARK	ELEMENT NR.
SSDAIMRX			1	73	2	4				BOX-RACK 2 (RACK) (25 PIN D-SUB)		1.861.583.00
			1	80	15	4				BOX-RACK 2 TO REAR PANEL TD		1.861.583.00
			1	80	22	26				RACK-TAPE DECK (SSDA) (26 PIN FLAT)		
			4	1	14	11B				SYSTEM CONTROLLER 1		1.861.763.00
			4	1	15	11B				SYSTEM CONTROLLER 2		1.861.763.00
			4	1	22	4				CONNECTOR 7 (BACKPANEL RACK 2)		
			4	1	51	4				BOX-RACK 2 CONNECTOR (CABLE)		
			11	20	33	26				TO ASSY1, GR80, EL22 P25		
			11	20	51	32B				MASTER SYSCON INTERFACE J12		1.861.721.00
SSDAIMTX			1	73	2	3				BOX-RACK 2 (RACK) (25 PIN D-SUB)		1.861.583.00
			1	80	15	3				BOX-RACK 2 TO REAR PANEL TD		1.861.583.00
			1	80	22	14				RACK-TAPE DECK (SSDA) (26 PIN FLAT)		
			4	1	14	8B				SYSTEM CONTROLLER 1		1.861.763.00
			4	1	15	8B				SYSTEM CONTROLLER 2		1.861.763.00
			4	1	22	3				CONNECTOR 7 (BACKPANEL RACK 2)		
			4	1	51	3				BOX-RACK 2 CONNECTOR (CABLE)		
			11	20	33	14				TO ASSY1, GR80, EL22 P25		
			11	20	51	26B				MASTER SYSCON INTERFACE J12		1.861.721.00
SSDAMRX			1	73	2	17				BOX-RACK 2 (RACK) (25 PIN D-SUB)		1.861.583.00
			1	80	15	17				BOX-RACK 2 TO REAR PANEL TD		1.861.583.00
			1	80	22	24				RACK-TAPE DECK (SSDA) (26 PIN FLAT)		
			4	1	14	11A				SYSTEM CONTROLLER 1		1.861.763.00
			4	1	15	11A				SYSTEM CONTROLLER 2		1.861.763.00
			4	1	22	17				CONNECTOR 7 (BACKPANEL RACK 2)		
			4	1	51	17				BOX-RACK 2 CONNECTOR (CABLE)		
			11	20	33	24				TO ASSY1, GR80, EL22 P25		
			11	20	51	31B				MASTER SYSCON INTERFACE J12		1.861.721.00
SSDAMTX			1	73	2	16				BOX-RACK 2 (RACK) (25 PIN D-SUB)		1.861.583.00
			1	80	15	16				BOX-RACK 2 TO REAR PANEL TD		1.861.583.00
			1	80	22	12				RACK-TAPE DECK (SSDA) (26 PIN FLAT)		
			4	1	14	8A				SYSTEM CONTROLLER 1		1.861.763.00
			4	1	15	8A				SYSTEM CONTROLLER 2		1.861.763.00
			4	1	22	16				CONNECTOR 7 (BACKPANEL RACK 2)		
			4	1	51	16				BOX-RACK 2 CONNECTOR (CABLE)		
			11	20	33	12				TO ASSY1, GR80, EL22 P25		
			11	20	51	25B				MASTER SYSCON INTERFACE J12		1.861.721.00
SWITCGND	1		3	3	3	5				AUDIO SPEAKER LEFT (CIS 5P) J4		1.861.746.00
SWITCH	1		3	3	3	1				AUDIO SPEAKER LEFT (CIS 5P) J4		1.861.746.00
SWTR			1	80	1	17A				CUE/PQ DELAY		1.861.816.00
			1	80	2	17C				PDM MODULATOR		1.861.811.00
SY/WDCKO			4	1	13	8A				TIMING + TEST		1.861.862.00
			4	1	19	24				CONNECTOR 4 (TC+AES+BNC)		
			4	3	13	1				CLOCK OUTPUT (BNC)		
			4	3	26	6				BNC INTERCONNECTION (CIS)		1.861.776.00
SYS-CTS			11	20	30	3				SSDA INT. SYNCHRONIZER P20		
			11	20	48	13B				MASTER SERIAL INTERFACE J09		1.820.753.00

* WILLI STUDER AG * S I G N A L W I R E L I S T * 86/12/08 * 10:54 * P A G E 166 *

* 1.861.022.00 D820X PCM RECORDER * 86/08/27 - 00 *

SIGNAL NAME	COLOR	MI	ASY	GRP	ELM	PNT	S	LV	TYPE	DESCRIPTION OF ELEMENT	REMARK	ELEMENT NR.
<<— CONT.OF			4	1	22	14				CONNECTOR 7 (BACKPANEL RACK 2)		
SSDACLK			4	1	51	14				BOX-RACK 2 CONNECTOR (CABLE)		
			11	20	33	8				TO ASSY1, GR80, EL22 P25		
			11	20	51	23B				MASTER SYSCON INTERFACE J12		1.861.721.00
SSDACTS			1	73	2	18				BOX-RACK 2 (RACK) (25 PIN D-SUB)		1.861.583.00
			1	80	15	18				BOX-RACK 2 TO REAR PANEL TD		1.861.583.00
			1	80	22	20				RACK-TAPE DECK (SSDA) (26 PIN FLAT)		
			4	1	14	9A				SYSTEM CONTROLLER 1		1.861.763.00
			4	1	15	9A				SYSTEM CONTROLLER 2		1.861.763.00
			4	1	22	18				CONNECTOR 7 (BACKPANEL RACK 2)		
			4	1	51	18				BOX-RACK 2 CONNECTOR (CABLE)		
			11	20	33	20				TO ASSY1, GR80, EL22 P25		
			11	20	51	29B				MASTER SYSCON INTERFACE J12		1.861.721.00
SSDADTR			1	73	2	15				BOX-RACK 2 (RACK) (25 PIN D-SUB)		1.861.583.00
			1	80	15	15				BOX-RACK 2 TO REAR PANEL TD		1.861.583.00
			1	80	22	16				RACK-TAPE DECK (SSDA) (26 PIN FLAT)		
			4	1	14	10A				SYSTEM CONTROLLER 1		1.861.763.00
			4	1	15	10A				SYSTEM CONTROLLER 2		1.861.763.00
			4	1	22	15				CONNECTOR 7 (BACKPANEL RACK 2)		
			4	1	51	15				BOX-RACK 2 CONNECTOR (CABLE)		
			11	20	33	16				TO ASSY1, GR80, EL22 P25		
			11	20	51	27B				MASTER SYSCON INTERFACE J12		1.861.721.00
SSDAICLK			1	73	2	1				BOX-RACK 2 (RACK) (25 PIN D-SUB)		1.861.583.00
			1	80	15	1				BOX-RACK 2 TO REAR PANEL TD		1.861.583.00
			1	80	22	10				RACK-TAPE DECK (SSDA) (26 PIN FLAT)		
			4	1	14	7B				SYSTEM CONTROLLER 1		1.861.763.00
			4	1	15	7B				SYSTEM CONTROLLER 2		1.861.763.00
			4	1	22	1				CONNECTOR 7 (BACKPANEL RACK 2)		
			4	1	51	1				BOX-RACK 2 CONNECTOR (CABLE)		
			11	20	33	10				TO ASSY1, GR80, EL22 P25		
			11	20	51	24B				MASTER SYSCON INTERFACE J12		1.861.721.00
SSDAICTS			1	73	2	5				BOX-RACK 2 (RACK) (25 PIN D-SUB)		1.861.583.00
			1	80	15	5				BOX-RACK 2 TO REAR PANEL TD		1.861.583.00
			1	80	22	22				RACK-TAPE DECK (SSDA) (26 PIN FLAT)		
			4	1	14	9B				SYSTEM CONTROLLER 1		1.861.763.00
			4	1	15	9B				SYSTEM CONTROLLER 2		1.861.763.00
			4	1	22	5				CONNECTOR 7 (BACKPANEL RACK 2)		
			4	1	51	5				BOX-RACK 2 CONNECTOR (CABLE)		
			11	20	33	22				TO ASSY1, GR80, EL22 P25		
			11	20	51	30B				MASTER SYSCON INTERFACE J12		1.861.721.00
SSDAIDTR			1	73	2	2				BOX-RACK 2 (RACK) (25 PIN D-SUB)		1.861.583.00
			1	80	15	2				BOX-RACK 2 TO REAR PANEL TD		1.861.583.00
			1	80	22	18				RACK-TAPE DECK (SSDA) (26 PIN FLAT)		
			4	1	14	10B				SYSTEM CONTROLLER 1		1.861.763.00
			4	1	15	10B				SYSTEM CONTROLLER 2		1.861.763.00
			4	1	22	2				CONNECTOR 7 (BACKPANEL RACK 2)		
			4	1	51	2				BOX-RACK 2 CONNECTOR (CABLE)		
			11	20	33	18				TO ASSY1, GR80, EL22 P25		
			11	20	51	28B				MASTER SYSCON INTERFACE J12		1.861.721.00

PUBLISHED: 12/86

* WILLI STUDER AG * S I G N A L W I R E L I S T * 86/12/08 * 10:54 * P A G E 168 *

* 1.861.022.00 D820X PCM RECORDER * 86/08/27 - 00 *

SIGNAL NAME	COLOR	MI	ASY	GRP	ELM	PNT	S	LV	TYPE	DESCRIPTION OF ELEMENT		REMARK	ELEMENT NR.
SYS-DTR			11	20	30	5				SSDA INT. SYNCHRONIZER	P20		
			11	20	48	13A				MASTER SERIAL INTERFACE	J09		1.820.753.00
SYS-RX			11	20	30	4				SSDA INT. SYNCHRONIZER	P20		
			11	20	48	12A				MASTER SERIAL INTERFACE	J09		1.820.753.00
SYS-TX			11	20	30	6				SSDA INT. SYNCHRONIZER	P20		
			11	20	48	12B				MASTER SERIAL INTERFACE	J09		1.820.753.00
SYSCFS1			4	1	11	22C				RUN PROCESSOR			1.861.860.00
			4	1	12	22C				RT/TC CODEC			1.861.861.00
SYSCFS2			4	1	11	23A				RUN PROCESSOR			1.861.860.00
			4	1	12	23A				RT/TC CODEC			1.861.861.00
SYWDIOUT			4	1	13	14B				TIMING + TEST			1.861.862.00
			4	1	20	1				CONNECTOR 5	(TC+EXT CLK)		
			4	3	11	1				TC + EXTERNAL CLK CONNECTOR			
SYWDOUT			4	1	13	14A				TIMING + TEST			1.861.862.00
			4	1	20	14				CONNECTOR 5	(TC+EXT CLK)		
			4	3	11	14				TC + EXTERNAL CLK CONNECTOR			
T-A0			11	26	1	12				FROM GRP27, ELMO1	P01		
			11	27	1	12				TO GRP26, ELMO1	P01		
T-A1			11	26	1	9				FROM GRP27, ELMO1	P01		
			11	27	1	9				TO GRP26, ELMO1	P01		
T-A2			11	26	1	10				FROM GRP27, ELMO1	P01		
			11	27	1	10				TO GRP26, ELMO1	P01		
T-A3			11	26	1	7				FROM GRP27, ELMO1	P01		
			11	27	1	7				TO GRP26, ELMO1	P01		
T-B0			11	26	1	8				FROM GRP27, ELMO1	P01		
			11	27	1	8				TO GRP26, ELMO1	P01		
T-B0			11	26	1	15				FROM GRP27, ELMO1	P01		
			11	27	1	15				TO GRP26, ELMO1	P01		
T-B1			11	26	1	13				FROM GRP27, ELMO1	P01		
			11	27	1	13				TO GRP26, ELMO1	P01		
T-B2			11	26	1	14				FROM GRP27, ELMO1	P01		
			11	27	1	14				TO GRP26, ELMO1	P01		
T-B3			11	26	1	11				FROM GRP27, ELMO1	P01		
			11	27	1	11				TO GRP26, ELMO1	P01		
T-DT-CH1			11	20	18	12				VU-METER PANEL, EXTERNAL	P18		
			11	20	19	12				SOURCE SELECTOR	P19		
			11	20	51	3B				MASTER SYSCON INTERFACE	J12		1.861.721.00

* WILLI STUDER AG * S I G N A L W I R E L I S T * 86/12/08 * 10:54 * P A G E 169 *

* 1.861.022.00 D820X PCM RECORDER * 86/08/27 - 00 *

SIGNAL NAME	COLOR	MI	ASY	GRP	ELM	PNT	S	LV	TYPE	DESCRIPTION OF ELEMENT		REMARK	ELEMENT NR.
T-DT-CH2			11	20	18	13				VU-METER PANEL, EXTERNAL	P18		
			11	20	19	13				SOURCE SELECTOR	P19		
			11	20	51	4A				MASTER SYSCON INTERFACE	J12		1.861.721.00
T-DT-CH3			11	20	18	14				VU-METER PANEL, EXTERNAL	P18		
			11	20	19	14				SOURCE SELECTOR	P19		
			11	20	51	4B				MASTER SYSCON INTERFACE	J12		1.861.721.00
T-DT-MP			11	20	17	15				TO HEAD BLOCK ASSEMBLY	P17		
			11	20	18	15				VU-METER PANEL, EXTERNAL	P18		
			11	20	19	15				SOURCE SELECTOR	P19		
			11	20	51	5A				MASTER SYSCON INTERFACE	J12		1.861.721.00
T-DT-RES			11	20	17	16				TO HEAD BLOCK ASSEMBLY	P17		
			11	20	18	16				VU-METER PANEL, EXTERNAL	P18		
			11	20	19	16				SOURCE SELECTOR	P19		
			11	20	51	8A				MASTER SYSCON INTERFACE	J12		1.861.721.00
T-DT-RP1			11	20	17	12				TO HEAD BLOCK ASSEMBLY	P17		
			11	20	51	5B				MASTER SYSCON INTERFACE	J12		1.861.721.00
T-DT-RP2			11	20	17	13				TO HEAD BLOCK ASSEMBLY	P17		
			11	20	51	6A				MASTER SYSCON INTERFACE	J12		1.861.721.00
T-DT-SJM			11	20	17	14				TO HEAD BLOCK ASSEMBLY	P17		
			11	20	51	7A				MASTER SYSCON INTERFACE	J12		1.861.721.00
T-IRES2			11	20	43	8B				TAPE DECK PERIPHERY CONTR.	J04		1.820.762.00
			11	20	43	19A				TAPE DECK PERIPHERY CONTR.	J04		1.820.762.00
T-IRES3			11	20	43	22A				TAPE DECK PERIPHERY CONTR.	J04		1.820.762.00
T-IRES4			11	20	43	23A				TAPE DECK PERIPHERY CONTR.	J04		1.820.762.00
T-IRES5			11	20	43	24A				TAPE DECK PERIPHERY CONTR.	J04		1.820.762.00
T-IRES6			11	20	43	25A				TAPE DECK PERIPHERY CONTR.	J04		1.820.762.00
T-IRES7			11	20	43	26A				TAPE DECK PERIPHERY CONTR.	J04		1.820.767.00
T-OE			11	26	1	20				FROM GRP27, ELMO1	P01		
			11	27	1	20				TO GRP26, ELMO1	P01		
T-ORES2			11	20	43	5A				TAPE DECK PERIPHERY CONTR.	J04		1.820.762.00
T-ORES3			11	20	48	21A				MASTER SERIAL INTERFACE	J09		1.820.753.00
T-PWRUN	5		1	79	1	7				POWER CONNECTOR (24 PIN MOLEX FEM)			
	5		1	79	2	7				POWER CONNECTOR (24 PIN MOLEX MALE)			
	5		11	19	1	7		F		FROM GRP32, ELMO2	J01		
	5		11	19	2	7		M		TO GRP21, ELMO2	P01		
			11	20	46	14				MP-UNIT TO CONTROL	J07		1.820.785.00
			11	20	49	14				MP-UNIT MASTER	J10		1.820.786.00
	5		11	20	62	14		U		WIRE FIELD			
	5		11	20	70	7		F		FROM GRP21, ELMO1	J13		
			11	32	2	7		M		OUTPUT	P01		

PUBLISHED: 12/86

WILLI STUDER AG * S I G N A L W I R E L I S T * 86/12/08 * 10:54 * P A G E 170

1.861.022.00 D820X PCM RECORDER * 86/08/27 - 00

SIGNAL NAME	COLOR	MI	ASY	GRP	ELM	PNT	S	LV	TYPE	DESCRIPTION OF ELEMENT		REMARK	ELEMENT NR.
T-READSL			11	20	17	10				TO HEAD BLOCK ASSEMBLY	P17		
			11	20	18	10				VU-METER PANEL, EXTERNAL	P18		
			11	20	19	10				SOURCE SELECTOR	P19		
			11	20	51	2B				MASTER SYSCON INTERFACE	J12		1.861.721.00
T-REFEXT			11	20	16	15				PARALLEL REMOTE CONTROL	P16		
			11	20	42	12B				CAPSTAN INTERFACE	J03		1.820.727.00
			11	20	51	10A				MASTER SYSCON INTERFACE	J12		1.861.721.00
			11	27	2	15				FROM GRP20, ELM16	P02		
T-REFINT			11	20	4	12				PAR. CONT. INT. SYNCHRONIZER	P04		
			11	20	42	11B				CAPSTAN INTERFACE	J03		1.820.727.00
			11	20	51	13B				MASTER SYSCON INTERFACE	J12		1.861.721.00
T-RESET			11	26	1	24				FROM GRP27, ELM01	P01		
			11	27	1	24				TO GRP26, ELM01	P01		
T-RL0			11	26	1	4				FROM GRP27, ELM01	P01		
			11	27	1	4				TO GRP26, ELM01	P01		
T-RL1			11	26	1	5				FROM GRP27, ELM01	P01		
			11	27	1	5				TO GRP26, ELM01	P01		
T-RL2			11	26	1	26				FROM GRP27, ELM01	P01		
			11	27	1	26				TO GRP26, ELM01	P01		
T-RL3			11	26	1	25				FROM GRP27, ELM01	P01		
			11	27	1	25				TO GRP26, ELM01	P01		
T-RL4			11	26	1	23				FROM GRP27, ELM01	P01		
			11	27	1	23				TO GRP26, ELM01	P01		
T-RL5			11	26	1	22				FROM GRP27, ELM01	P01		
			11	27	1	22				TO GRP26, ELM01	P01		
T-RL6			11	26	1	19				FROM GRP27, ELM01	P01		
			11	27	1	19				TO GRP26, ELM01	P01		
T-RL7			11	26	1	18				FROM GRP27, ELM01	P01		
			11	27	1	18				TO GRP26, ELM01	P01		
T-SADA			11	20	17	7				TO HEAD BLOCK ASSEMBLY	P17		
			11	20	18	7				VU-METER PANEL, EXTERNAL	P18		
			11	20	19	7				SOURCE SELECTOR	P19		
			11	20	51	1A				MASTER SYSCON INTERFACE	J12		1.861.721.00
T-SADB			11	20	17	8				TO HEAD BLOCK ASSEMBLY	P17		
			11	20	18	8				VU-METER PANEL, EXTERNAL	P18		
			11	20	19	8				SOURCE SELECTOR	P19		
			11	20	51	1B				MASTER SYSCON INTERFACE	J12		1.861.721.00
T-SADC			11	20	17	9				TO HEAD BLOCK ASSEMBLY	P17		
			11	20	18	9				VU-METER PANEL, EXTERNAL	P18		
			11	20	19	9				SOURCE SELECTOR	P19		
			11	20	51	2A				MASTER SYSCON INTERFACE	J12		1.861.721.00

WILLI STUDER AG * S I G N A L W I R E L I S T * 86/12/08 * 10:54 * P A G E 171

1.861.022.00 D820X PCM RECORDER * 86/08/27 - 00

SIGNAL NAME	COLOR	MI	ASY	GRP	ELM	PNT	S	LV	TYPE	DESCRIPTION OF ELEMENT		REMARK	ELEMENT NR.
T-SL0			11	26	1	16				FROM GRP27, ELM01	P01		
			11	27	1	16				TO GRP26, ELM01	P01		
T-SL1			11	26	1	17				FROM GRP27, ELM01	P01		
			11	27	1	17				TO GRP26, ELM01	P01		
T-SL2			11	26	1	21				FROM GRP27, ELM01	P01		
			11	27	1	21				TO GRP26, ELM01	P01		
T-SL3			11	26	1	6				FROM GRP27, ELM01	P01		
			11	27	1	6				TO GRP26, ELM01	P01		
T-SPOSL1			11	39	1	11				FROM GRP20, ELM03	P01		
T-SPOSL2			11	39	1	12				FROM GRP20, ELM03	P01		
T-SUPVON			11	20	14	6				FUSE FAILURE DETECTOR	P14		
			11	20	43	10B				TAPE DECK PERIPHERY CONTR.	J04		1.820.762.00
			11	59	1	6				FROM GRP20, ELM14	P01		
T-VARSPD			11	20	18	21				VU-METER PANEL, EXTERNAL	P18		
T-WRTSL			11	20	17	11				TO HEAD BLOCK ASSEMBLY	P17		
			11	20	18	11				VU-METER PANEL, EXTERNAL	P18		
			11	20	19	11				SOURCE SELECTOR	P19		
			11	20	51	3A				MASTER SYSCON INTERFACE	J12		1.861.721.00
TA-AUIR			11	20	48	21B				MASTER SERIAL INTERFACE	J09		1.820.753.00
			11	20	51	11A				MASTER SYSCON INTERFACE	J12		1.861.721.00
TAD-RESA			1	80	22	2				RACK-TAPE DECK (SSDA) (26 PIN FLAT)			
			11	20	33	2				TO ASSY1, GR80, EL22	P25		
			11	20	51	20B				MASTER SYSCON INTERFACE	J12		1.861.721.00
TAD-RESB			1	80	22	4				RACK-TAPE DECK (SSDA) (26 PIN FLAT)			
			11	20	33	4				TO ASSY1, GR80, EL22	P25		
			11	20	51	21B				MASTER SYSCON INTERFACE	J12		1.861.721.00
TAD-RESC			1	80	22	6				RACK-TAPE DECK (SSDA) (26 PIN FLAT)			
			11	20	33	6				TO ASSY1, GR80, EL22	P25		
			11	20	51	22B				MASTER SYSCON INTERFACE	J12		1.861.721.00
TANTR1			3	3	5	6				TO TANDEM POT	(CIS 6P) J1		1.912.001.30
			3	7	1	1				TANDEM POT SOLD.			1.912.001.30
TANTR2			3	3	5	1				TO TANDEM POT	(CIS 6P) J1		1.912.001.30
			3	7	1	5				TANDEM POT SOLD.			1.912.001.30
TAPETYPE			4	1	11	23C				RUN PROCESSOR			1.861.860.00
			4	1	12	23C				RT/TC CODEC			1.861.861.00
TAVAR1			3	3	5	5				TO TANDEM POT	(CIS 6P) J1		1.912.001.30
			3	7	1	2				TANDEM POT SOLD.			1.912.001.30
TAVAR2			3	3	5	2				TO TANDEM POT	(CIS 6P) J1		1.912.001.30
			3	7	1	4				TANDEM POT SOLD.			1.912.001.30

PUBLISHED: 12/86

* WILLI STUDER AG * S I G N A L W I R E L I S T * 86/12/08 * 10:54 * P A G E 172 *

* 1.861.022.00 D820X PCM RECORDER * 86/08/27 - 00 *

SIGNAL NAME	COLOR	MI	ASY	GRP	ELM	PNT	S	LV	TYPE	DESCRIPTION OF ELEMENT		REMARK	ELEMENT NR.
TC-ADR0			11	20	34	23				INT. SYNCHRONIZER	P24		
			11	20	41	31				CAPSTAN CONTROL UNIT	J02		1.820.764.00
			11	20	42	24A				CAPSTAN INTERFACE	J03		1.820.727.00
TC-ADR1			11	20	34	21				INT. SYNCHRONIZER	P24		
			11	20	41	3C				CAPSTAN CONTROL UNIT	J02		1.820.764.00
			11	20	42	23A				CAPSTAN INTERFACE	J03		1.820.727.00
TC-ADR2			11	20	34	19				INT. SYNCHRONIZER	P24		
			11	20	41	29				CAPSTAN CONTROL UNIT	J02		1.820.764.00
			11	20	42	22A				CAPSTAN INTERFACE	J03		1.820.727.00
TC-CAPDC			11	20	3	14				CAPSTAN MOTOR DRIVE AMPLIFIER	P03		
			11	20	41	4				CAPSTAN CONTROL UNIT	J02		1.820.764.00
			11	39	1	14				FROM GRP20, ELM03	P01		
TC-CDIRI			11	20	41	6				CAPSTAN CONTROL UNIT	J02		1.820.764.00
			11	20	42	1A				CAPSTAN INTERFACE	J03		1.820.727.00
TC-CPREF			11	20	3	13				CAPSTAN MOTOR DRIVE AMPLIFIER	P03		
			11	39	1	13				FROM GRP20, ELM03	P01		
TC-DATA0			11	20	34	39				INT. SYNCHRONIZER	P24		
			11	20	41	39				CAPSTAN CONTROL UNIT	J02		1.820.764.00
			11	20	42	32A				CAPSTAN INTERFACE	J03		1.820.727.00
TC-DATA1			11	20	34	37				INT. SYNCHRONIZER	P24		
			11	20	41	38				CAPSTAN CONTROL UNIT	J02		1.820.764.00
			11	20	42	31A				CAPSTAN INTERFACE	J03		1.820.727.00
TC-DATA2			11	20	34	35				INT. SYNCHRONIZER	P24		
			11	20	41	37				CAPSTAN CONTROL UNIT	J02		1.820.764.00
			11	20	42	30A				CAPSTAN INTERFACE	J03		1.820.727.00
TC-DATA3			11	20	34	33				INT. SYNCHRONIZER	P24		
			11	20	41	36				CAPSTAN CONTROL UNIT	J02		1.820.764.00
			11	20	42	29A				CAPSTAN INTERFACE	J03		1.820.727.00
TC-DATA4			11	20	34	31				INT. SYNCHRONIZER	P24		
			11	20	41	35				CAPSTAN CONTROL UNIT	J02		1.820.764.00
			11	20	42	28A				CAPSTAN INTERFACE	J03		1.820.727.00
TC-DATA5			11	20	34	29				INT. SYNCHRONIZER	P24		
			11	20	41	34				CAPSTAN CONTROL UNIT	J02		1.820.764.00
			11	20	42	27A				CAPSTAN INTERFACE	J03		1.820.727.00
TC-DATA6			11	20	34	27				INT. SYNCHRONIZER	P24		
			11	20	41	33				CAPSTAN CONTROL UNIT	J02		1.820.764.00
			11	20	42	26A				CAPSTAN INTERFACE	J03		1.820.727.00
TC-DATA7			11	20	34	25				INT. SYNCHRONIZER	P24		
			11	20	41	32				CAPSTAN CONTROL UNIT	J02		1.820.764.00
			11	20	42	25A				CAPSTAN INTERFACE	J03		1.820.727.00

* WILLI STUDER AG * S I G N A L W I R E L I S T * 86/12/08 * 10:54 * P A G E 173 *

* 1.861.022.00 D820X PCM RECORDER * 86/08/27 - 00 *

SIGNAL NAME	COLOR	MI	ASY	GRP	ELM	PNT	S	LV	TYPE	DESCRIPTION OF ELEMENT		REMARK	ELEMENT NR.
TC-ENB			11	20	34	17				INT. SYNCHRONIZER	P24		
			11	20	41	28				CAPSTAN CONTROL UNIT	J02		1.820.764.00
			11	20	42	21A				CAPSTAN INTERFACE	J03		1.820.727.00
TC-ENBG			11	20	34	7				INT. SYNCHRONIZER	P24		
			11	20	41	11				CAPSTAN CONTROL UNIT	J02		1.820.764.00
			11	20	42	8B				CAPSTAN INTERFACE	J03		1.820.727.00
TC-EREF			11	20	41	14				CAPSTAN CONTROL UNIT	J02		1.820.764.00
			11	20	42	10B				CAPSTAN INTERFACE	J03		1.820.727.00
TC-HALL1			11	38	1	4			F	FROM GRP39, ELM02	J01		
			11	39	2	4			M	TO GRP38, ELM01	P02		
TC-HALL2			11	38	1	7			F	FROM GRP39, ELM02	J01		
			11	39	2	7			M	TO GRP38, ELM01	P02		
TC-HALL3			11	38	1	10			F	FROM GRP39, ELM02	J01		
			11	39	2	10			M	TO GRP38, ELM01	P02		
TC-INEX			11	20	41	9				CAPSTAN CONTROL UNIT	J02		1.820.764.00
			11	20	42	12A				CAPSTAN INTERFACE	J03		1.820.727.00
TC-IRQ			11	20	34	5				INT. SYNCHRONIZER	P24		
			11	20	41	13				CAPSTAN CONTROL UNIT	J02		1.820.764.00
			11	20	42	9A				CAPSTAN INTERFACE	J03		1.820.727.00
TC-REF			11	20	41	8				CAPSTAN CONTROL UNIT	J02		1.820.764.00
			11	20	42	11A				CAPSTAN INTERFACE	J03		1.820.727.00
TC-REFP			11	20	41	3				CAPSTAN CONTROL UNIT	J02		1.820.764.00
			11	20	42	4B				CAPSTAN INTERFACE	J03		1.820.727.00
TC-RESMP			11	20	34	9				INT. SYNCHRONIZER	P24		
			11	20	41	10				CAPSTAN CONTROL UNIT	J02		1.820.764.00
			11	20	42	8A				CAPSTAN INTERFACE	J03		1.820.727.00
TC-RW			11	20	34	15				INT. SYNCHRONIZER	P24		
			11	20	41	27				CAPSTAN CONTROL UNIT	J02		1.820.764.00
			11	20	42	20A				CAPSTAN INTERFACE	J03		1.820.727.00
TC-SL1			11	20	41	24				CAPSTAN CONTROL UNIT	J02		1.820.764.00
			11	20	42	13A				CAPSTAN INTERFACE	J03		1.820.727.00
TC-SL2			11	20	41	23				CAPSTAN CONTROL UNIT	J02		1.820.764.00
			11	20	42	14A				CAPSTAN INTERFACE	J03		1.820.727.00
TC-SL3			11	20	34	1				INT. SYNCHRONIZER	P24		
			11	20	41	16				CAPSTAN CONTROL UNIT	J02		1.820.764.00
TC-SL4			11	20	34	3				INT. SYNCHRONIZER	P24		
			11	20	41	15				CAPSTAN CONTROL UNIT	J02		1.820.764.00

PUBLISHED: 12/86

WILLI STUDER AG * S I G N A L W I R E L I S T * 86/12/08 * 10:54 * P A G E 174

1.861.022.00 D820X PCM RECORDER * 86/08/27 - 00

SIGNAL NAME	COLOR	MI	ASY	GRP	ELM	PNT	S	LV	TYPE	DESCRIPTION OF ELEMENT		REMARK	ELEMENT NR.
TC-TCDIR			11	20	4	8				PAR. CONT. INT. SYNCHRONIZER	P04		
			11	20	16	18				PARALLEL REMOTE CONTROL	P16		
			11	20	42	6A				CAPSTAN INTERFACE	J03		1.820.727.00
			11	20	42	6B				CAPSTAN INTERFACE	J03		1.820.727.00
			11	27	2	18				FROM GRP20. ELM16	P02		
TC-TCMV			11	20	4	10				PAR. CONT. INT. SYNCHRONIZER	P04		
			11	20	16	17				PARALLEL REMOTE CONTROL	P16		
			11	20	42	5A				CAPSTAN INTERFACE	J03		1.820.727.00
			11	20	42	5B				CAPSTAN INTERFACE	J03		1.820.727.00
			11	27	2	17				FROM GRP20. ELM16	P02		
TC-TCMVI			11	20	41	5				CAPSTAN CONTROL UNIT	J02		1.820.764.00
			11	20	42	2A				CAPSTAN INTERFACE	J03		1.820.727.00
TCIIN			4	1	12	16B				RT/TC CODEC			1.861.861.00
			4	1	19	21				CONNECTOR 4	(TC+AES+BNC)		
			4	1	20	5				CONNECTOR 5	(TC+EXT CLK)		
			4	3	8	3				TC INPUT	(XLR)		
			4	3	10	4				TIME CODE I/O BOARD	(CIS)		
			4	3	11	5				TC + EXTERNAL CLK CONNECTOR			
			4	3	24	4				TC TRANSFORMATOR	(CIS)		1.861.771.00
TCIN			4	1	12	16A				RT/TC CODEC			1.861.861.00
			4	1	19	20				CONNECTOR 4	(TC+AES+BNC)		
			4	1	20	18				CONNECTOR 5	(TC+EXT CLK)		
			4	3	8	2				TC INPUT	(XLR)		
			4	3	10	3				TIME CODE I/O BOARD	(CIS)		
			4	3	11	18				TC + EXTERNAL CLK CONNECTOR			
			4	3	24	3				TC TRANSFORMATOR	(CIS)		1.861.771.00
TCIOUT			4	1	12	17B				RT/TC CODEC			1.861.861.00
			4	1	19	19				CONNECTOR 4	(TC+AES+BNC)		
			4	1	20	4				CONNECTOR 5	(TC+EXT CLK)		
			4	3	7	3				TC OUTPUT	(XLR)		
			4	3	10	7				TIME CODE I/O BOARD	(CIS)		
			4	3	11	4				TC + EXTERNAL CLK CONNECTOR			
			4	3	24	7				TC TRANSFORMATOR	(CIS)		1.861.771.00
TCMOD			2	1	4	31B				DETECTOR			1.861.804.00
			2	1	7	31B				PLAYBACK AMPLIFIER			1.861.801.00
TCOUT			4	1	12	17A				RT/TC CODEC			1.861.861.00
			4	1	19	18				CONNECTOR 4	(TC+AES+BNC)		
			4	1	20	17				CONNECTOR 5	(TC+EXT CLK)		
			4	3	7	2				TC OUTPUT	(XLR)		
			4	3	10	6				TIME CODE I/O BOARD	(CIS)		
			4	3	11	17				TC + EXTERNAL CLK CONNECTOR			
			4	3	24	6				TC TRANSFORMATOR	(CIS)		1.861.771.00
TCRCERR			4	1	8	24C				CODEC CONTROL			1.861.857.00
			4	1	10	21C				TRANSFORMATTER			1.861.859.00
TCY-4			4	1	8	22B				CODEC CONTROL			1.861.857.00
			4	1	10	22B				TRANSFORMATTER			1.861.859.00

WILLI STUDER AG * S I G N A L W I R E L I S T * 86/12/08 * 10:54 * P A G E 175

1.861.022.00 D820X PCM RECORDER * 86/08/27 - 00

SIGNAL NAME	COLOR	MI	ASY	GRP	ELM	PNT	S	LV	TYPE	DESCRIPTION OF ELEMENT		REMARK	ELEMENT NR.
TD-ADR0			11	20	42	24B				CAPSTAN INTERFACE	J03		1.820.727.00
			11	20	43	24B				TAPE DECK PERIPHERY CONTR.	J04		1.820.762.00
			11	20	44	31				TAPE DECK COUNTER / TIMER	J05		1.820.761.00
			11	20	45	31				SPOOLING MOTOR CONTROLLER	J06		1.820.760.00
			11	20	46	31				MP-UNIT TD CONTROL	J07		1.820.785.00
			11	20	47	31				TAPE DECK SERIAL INTERFACE	J08		1.820.763.00
TD-ADR1			11	20	42	23B				CAPSTAN INTERFACE	J03		1.820.727.00
			11	20	43	23B				TAPE DECK PERIPHERY CONTR.	J04		1.820.762.00
			11	20	44	30				TAPE DECK COUNTER / TIMER	J05		1.820.761.00
			11	20	45	30				SPOOLING MOTOR CONTROLLER	J06		1.820.760.00
			11	20	46	30				MP-UNIT TD CONTROL	J07		1.820.785.00
			11	20	47	30				TAPE DECK SERIAL INTERFACE	J08		1.820.763.00
TD-ADR2			11	20	43	22B				TAPE DECK PERIPHERY CONTR.	J04		1.820.762.00
			11	20	44	29				TAPE DECK COUNTER / TIMER	J05		1.820.761.00
			11	20	45	29				SPOOLING MOTOR CONTROLLER	J06		1.820.760.00
			11	20	46	29				MP-UNIT TD CONTROL	J07		1.820.785.00
			11	20	47	29				TAPE DECK SERIAL INTERFACE	J08		1.820.763.00
TD-ADR3			11	20	44	6				TAPE DECK COUNTER / TIMER	J05		1.820.761.00
			11	20	46	6				MP-UNIT TD CONTROL	J07		1.820.785.00
			11	20	47	24				TAPE DECK SERIAL INTERFACE	J08		1.820.763.00
TD-CAPSY			11	20	4	13				PAR. CONT. INT. SYNCHRONIZER	P04		
			11	20	41	7				CAPSTAN CONTROL UNIT	J02		1.820.764.00
			11	20	48	22A				MASTER SERIAL INTERFACE	J09		1.820.753.00
TD-CRES			11	20	41	26				CAPSTAN CONTROL UNIT	J02		1.820.764.00
			11	20	43	6A				TAPE DECK PERIPHERY CONTR.	J04		1.820.762.00
TD-C3G7K			11	20	5	7				SPOOLING MOTOR SUPPLY	P05		
			11	20	46	22				MP-UNIT TD CONTROL	J07		1.820.785.00
			11	31	3	7				FROM GRP20. ELM05	P02		
TD-C76K	9		1	79	1	4				POWER CONNECTOR (24 PIN MOLEX FEM)			
	9		1	79	2	4				POWER CONNECTOR (24 PIN MOLEX MALE)			
	9		11	19	1	4		F		FROM GRP32. ELM02	J01		
	9		11	19	2	4		M		TO GRP21. ELM02	P01		
			11	20	3	15				CAPSTAN MOTOR DRIVE AMPLIFIER	P03		
			11	20	40	17				SPOOLING MOTOR DRIVER	J01		1.820.759.00
			11	20	46	16				MP-UNIT TD CONTROL	J07		1.820.785.00
	9		11	20	62	15		U		WIRE FIELD			
	9		11	20	70	4		F		FROM GRP21. ELM01	J13		
			11	32	2	4		M		OUTPUT	P01		
			11	39	1	15				FROM GRP20. ELM03	P01		
TD-DATA0			11	20	42	32B				CAPSTAN INTERFACE	J03		1.820.727.00
			11	20	43	32B				TAPE DECK PERIPHERY CONTR.	J04		1.820.762.00
			11	20	44	39				TAPE DECK COUNTER / TIMER	J05		1.820.761.00
			11	20	45	39				SPOOLING MOTOR CONTROLLER	J06		1.820.760.00
			11	20	46	39				MP-UNIT TD CONTROL	J07		1.820.785.00
			11	20	47	39				TAPE DECK SERIAL INTERFACE	J08		1.820.763.00

PUBLISHED: 12/86

* WILLI STUDER AG * S I G N A L W I R E L I S T * 86/12/08 * 10:54 * P A G E 176 *

* 1.861.022.00 D820X PCM RECORDER * 86/08/27 - 00 *

SIGNAL NAME	COLOR	MI	ASY	GRP	ELM	PNT	S	LV	TYPE	DESCRIPTION OF ELEMENT		REMARK	ELEMENT NR.
TD-DATA1			11	20	42	31B				CAPSTAN INTERFACE	J03		1.820.727.00
			11	20	43	31B				TAPE DECK PERIPHERY CONTR.	J04		1.820.762.00
			11	20	44	38				TAPE DECK COUNTER / TIMER	J05		1.820.761.00
			11	20	45	38				SPOOLING MOTOR CONTROLLER	J06		1.820.760.00
			11	20	46	38				MP-UNIT TO CONTROL	J07		1.820.785.00
			11	20	47	38				TAPE DECK SERIAL INTERFACE	J08		1.820.763.00
TD-DATA2			11	20	42	30B				CAPSTAN INTERFACE	J03		1.820.727.00
			11	20	43	30B				TAPE DECK PERIPHERY CONTR.	J04		1.820.762.00
			11	20	44	37				TAPE DECK COUNTER / TIMER	J05		1.820.761.00
			11	20	45	37				SPOOLING MOTOR CONTROLLER	J06		1.820.760.00
			11	20	46	37				MP-UNIT TO CONTROL	J07		1.820.785.00
			11	20	47	37				TAPE DECK SERIAL INTERFACE	J08		1.820.763.00
TD-DATA3			11	20	42	29B				CAPSTAN INTERFACE	J03		1.820.727.00
			11	20	43	29B				TAPE DECK PERIPHERY CONTR.	J04		1.820.762.00
			11	20	44	36				TAPE DECK COUNTER / TIMER	J05		1.820.761.00
			11	20	45	36				SPOOLING MOTOR CONTROLLER	J06		1.820.760.00
			11	20	46	36				MP-UNIT TO CONTROL	J07		1.820.785.00
			11	20	47	36				TAPE DECK SERIAL INTERFACE	J08		1.820.763.00
TD-DATA4			11	20	42	28B				CAPSTAN INTERFACE	J03		1.820.727.00
			11	20	43	28B				TAPE DECK PERIPHERY CONTR.	J04		1.820.762.00
			11	20	44	35				TAPE DECK COUNTER / TIMER	J05		1.820.761.00
			11	20	45	35				SPOOLING MOTOR CONTROLLER	J06		1.820.760.00
			11	20	46	35				MP-UNIT TO CONTROL	J07		1.820.785.00
			11	20	47	35				TAPE DECK SERIAL INTERFACE	J08		1.820.763.00
TD-DATA5			11	20	42	27B				CAPSTAN INTERFACE	J03		1.820.727.00
			11	20	43	27B				TAPE DECK PERIPHERY CONTR.	J04		1.820.762.00
			11	20	44	34				TAPE DECK COUNTER / TIMER	J05		1.820.761.00
			11	20	45	34				SPOOLING MOTOR CONTROLLER	J06		1.820.760.00
			11	20	46	34				MP-UNIT TO CONTROL	J07		1.820.785.00
			11	20	47	34				TAPE DECK SERIAL INTERFACE	J08		1.820.763.00
TD-DATA6			11	20	42	26B				CAPSTAN INTERFACE	J03		1.820.727.00
			11	20	43	26B				TAPE DECK PERIPHERY CONTR.	J04		1.820.762.00
			11	20	44	33				TAPE DECK COUNTER / TIMER	J05		1.820.761.00
			11	20	45	33				SPOOLING MOTOR CONTROLLER	J06		1.820.760.00
			11	20	46	33				MP-UNIT TO CONTROL	J07		1.820.785.00
			11	20	47	33				TAPE DECK SERIAL INTERFACE	J08		1.820.763.00
TD-DATA7			11	20	42	25B				CAPSTAN INTERFACE	J03		1.820.727.00
			11	20	43	25B				TAPE DECK PERIPHERY CONTR.	J04		1.820.762.00
			11	20	44	32				TAPE DECK COUNTER / TIMER	J05		1.820.761.00
			11	20	45	32				SPOOLING MOTOR CONTRCLLER	J06		1.820.760.00
			11	20	46	32				MP-UNIT TO CONTROL	J07		1.820.785.00
			11	20	47	32				TAPE DECK SERIAL INTERFACE	J08		1.820.763.00
TD-ENB			11	20	42	21B				CAPSTAN INTERFACE	J03		1.820.727.00
			11	20	43	21B				TAPE DECK PERIPHERY CONTR.	J04		1.820.762.00
			11	20	44	28				TAPE DECK COUNTER / TIMER	J05		1.820.761.00
			11	20	45	28				SPOOLING MOTOR CONTROLLER	J06		1.820.760.00
			11	20	46	28				MP-UNIT TO CONTROL	J07		1.820.785.00
			11	20	47	28				TAPE DECK SERIAL INTERFACE	J08		1.820.763.00

* WILLI STUDER AG * S I G N A L W I R E L I S T * 86/12/08 * 10:54 * P A G E 177 *

* 1.861.022.00 D820X PCM RECORDER * 86/08/27 - 00 *

SIGNAL NAME	COLOR	MI	ASY	GRP	ELM	PNT	S	LV	TYPE	DESCRIPTION OF ELEMENT		REMARK	ELEMENT NR.
TD-HEACT			11	20	43	9B				TAPE DECK PERIPHERY CONTR.	J04		1.820.762.00
			11	20	48	20A				MASTER SERIAL INTERFACE	J09		1.820.753.00
TD-ICRE1			11	20	44	9				TAPE DECK COUNTER / TIMER	J05		1.820.761.00
TD-ICRE2			11	20	44	11				TAPE DECK COUNTER / TIMER	J05		1.820.761.00
TD-ICRE3			11	20	44	16				TAPE DECK COUNTER / TIMER	J05		1.820.761.00
TD-ICRE4			11	20	44	17				TAPE DECK COUNTER / TIMER	J05		1.820.761.00
TD-ICRE5			11	20	44	23				TAPE DECK COUNTER / TIMER	J05		1.820.761.00
TD-IRQ			11	20	42	13B				CAPSTAN INTERFACE	J03		1.820.727.00
			11	20	44	13				TAPE DECK COUNTER / TIMER	J05		1.820.761.00
			11	20	46	13				MP-UNIT TO CONTROL	J07		1.820.785.00
			11	20	47	12				TAPE DECK SERIAL INTERFACE	J08		1.820.763.00
TD-MOVE			11	20	43	4A				TAPE DECK PERIPHERY CONTR.	J04		1.820.762.00
TD-MOVE1			11	20	11	9				MOVE SENSOR	P11		
			11	20	44	7				TAPE DECK COUNTER / TIMER	J05		1.820.761.00
			11	45	1	9				FROM GRP20. ELM11	P01		
TD-MOVE2			11	20	11	8				MOVE SENSOR	P11		
			11	20	44	8				TAPE DECK COUNTER / TIMER	J05		1.820.761.00
			11	45	1	8				FROM GRP20. ELM11	P01		
TD-MVCLK			1	80	21	2				RACK-TAPE DECK (SERVO)(26 PIN FLAT)			
			11	20	4	15				PAR. CONT. INT. SYNCHRONIZER	P04		
			11	20	16	23				PARALLEL REMOTE CONTROL	P16		
			11	20	32	2				TO ASSY1. GR80. EL21	P24		
			11	20	44	12				TAPE DECK COUNTER / TIMER	J05		1.820.761.00
			11	20	48	25B				MASTER SERIAL INTERFACE	J09		1.820.753.00
			11	27	2	23				FROM GRP20. ELM16	P02		
TD-MVDIR			1	80	21	4				RACK-TAPE DECK (SERVO)(26 PIN FLAT)			
			11	20	4	14				PAR. CONT. INT. SYNCHRONIZER	P04		
			11	20	16	24				PARALLEL REMOTE CONTROL	P16		
			11	20	32	4				TO ASSY1. GR80. EL21	P24		
			11	20	44	14				TAPE DECK COUNTER / TIMER	J05		1.820.761.00
			11	20	48	25A				MASTER SERIAL INTERFACE	J09		1.820.753.00
			11	27	2	24				FROM GRP20. ELM16	P02		
TD-NMI			11	20	46	9				MP-UNIT TO CONTROL	J07		1.820.785.00
TD-PENBL			11	20	40	23				SPOOLING MOTOR DRIVER	J01		1.820.759.00
			11	20	43	20A				TAPE DECK PERIPHERY CONTR.	J04		1.820.762.00
TD-PENBR			11	20	40	15				SPOOLING MOTOR DRIVER	J01		1.820.759.00
			11	20	43	21A				TAPE DECK PERIPHERY CONTR.	J04		1.820.762.00
TD-PWENB			11	20	5	8				SPOOLING MOTOR SUPPLY	P05		
			11	20	43	10A				TAPE DECK PERIPHERY CONTR.	J04		1.820.762.00
			11	31	3	8				FROM GRP20. ELM05	P02		

PUBLISHED: 12/86

WILLI STUDER AG * SIGNAL WIRE LIST * 86/12/08 * 10:54 * PAGE 178

1.861.022.J0 D820X PCM RECORDER * 86/08/27 - 00

SIGNAL NAME	COLOR	MI	ASY	GRP	ELM	PNT	S	LV	TYPE	DESCRIPTION OF ELEMENT		REMARK	ELEMENT NR.
TD-P14B			11	20	46	1				MP-UNIT TO CONTROL	J07		1.820.785.00
TD-P15B			11	20	46	2				MP-UNIT TO CONTROL	J07		1.820.785.00
TD-P16B			11	20	46	12				MP-UNIT TO CONTROL	J07		1.820.785.00
TD-P17B			11	20	46	8				MP-UNIT TO CONTROL	J07		1.820.785.00
TD-RALC1			11	20	7	14				TAPE LIFT MOTOR, LEFT	P07		
			11	20	43	18				TAPE DECK PERIPHERY CONTR.	J04		1.820.762.00
			11	46	1	14				FROM GRP20, ELM07	P01		
TD-RALC2			11	20	7	12				TAPE LIFT MOTOR, LEFT	P07		
			11	20	43	2B				TAPE DECK PERIPHERY CONTR.	J04		1.820.762.00
			11	46	1	12				FROM GRP20, ELM07	P01		
TD-RALEN			11	20	7	15				TAPE LIFT MOTOR, LEFT	P07		
			11	20	43	1A				TAPE DECK PERIPHERY CONTR.	J04		1.820.762.00
			11	46	1	15				FROM GRP20, ELM07	P01		
TD-RALP1			11	20	7	11				TAPE LIFT MOTOR, LEFT	P07		
			11	20	43	3A				TAPE DECK PERIPHERY CONTR.	J04		1.820.762.00
			11	46	1	11				FROM GRP20, ELM07	P01		
TD-RALP2			11	20	7	13				TAPE LIFT MOTOR, LEFT	P07		
			11	20	43	2A				TAPE DECK PERIPHERY CONTR.	J04		1.820.762.00
			11	46	1	13				FROM GRP20, ELM07	P01		
TD-RARC1			11	20	8	14				TAPE LIFT MOTOR, RIGHT	P08		
			11	20	43	6B				TAPE DECK PERIPHERY CONTR.	J04		1.820.762.00
			11	47	1	14				FROM GRP20, ELM08	P01		
TD-RARC2			11	20	8	12				TAPE LIFT MOTOR, RIGHT	P08		
			11	20	43	7B				TAPE DECK PERIPHERY CONTR.	J04		1.820.762.00
			11	47	1	12				FROM GRP20, ELM08	P01		
TD-RAREN			11	20	8	15				TAPE LIFT MOTOR, RIGHT	P08		
			11	20	43	5B				TAPE DECK PERIPHERY CONTR.	J04		1.820.762.00
			11	47	1	15				FROM GRP20, ELM08	P01		
TD-RARP1			11	20	8	11				TAPE LIFT MOTOR, RIGHT	P08		
			11	20	43	3B				TAPE DECK PERIPHERY CONTR.	J04		1.820.762.00
			11	47	1	11				FROM GRP20, ELM08	P01		
TD-RARP2			11	20	8	13				TAPE LIFT MOTOR, RIGHT	P08		
			11	20	43	4B				TAPE DECK PERIPHERY CONTR.	J04		1.820.762.00
			11	47	1	13				FROM GRP20, ELM08	P01		
TD-RES			11	20	42	19B				CAPSTAN INTERFACE	J03		1.820.727.00
			11	20	43	19B				TAPE DECK PERIPHERY CONTR.	J04		1.820.762.00
			11	20	44	26				TAPE DECK COUNTER / TIMER	J05		1.820.761.00
			11	20	45	26				SPOOLING MOTOR CONTROLLER	J06		1.820.760.00
			11	20	47	26				TAPE DECK SERIAL INTERFACE	J08		1.820.763.00
TD-RESET			11	20	46	26				MP-UNIT TO CONTROL	J07		1.820.785.00
			11	20	47	23				TAPE DECK SERIAL INTERFACE	J08		1.820.763.00

WILLI STUDER AG * SIGNAL WIRE LIST * 86/12/08 * 10:54 * PAGE 179

1.861.022.J0 D820X PCM RECORDER * 86/08/27 - 00

SIGNAL NAME	COLOR	MI	ASY	GRP	ELM	PNT	S	LV	TYPE	DESCRIPTION OF ELEMENT		REMARK	ELEMENT NR.
TD-RESMP			11	20	46	5				MP-UNIT TO CONTROL	J07		1.820.785.00
			11	20	47	11				TAPE DECK SERIAL INTERFACE	J08		1.820.763.00
TD-RW			11	20	42	20B				CAPSTAN INTERFACE	J03		1.820.727.00
			11	20	43	20B				TAPE DECK PERIPHERY CONTR.	J04		1.820.762.00
			11	20	44	27				TAPE DECK COUNTER / TIMER	J05		1.820.761.00
			11	20	45	27				SPOOLING MOTOR CONTROLLER	J06		1.820.760.00
			11	20	46	27				MP-UNIT TO CONTROL	J07		1.820.785.00
			11	20	47	27				TAPE DECK SERIAL INTERFACE	J08		1.820.763.00
TD-RX			11	20	46	10				MP-UNIT TO CONTROL	J07		1.820.785.00
TD-SHLD			11	20	6	8				EXT. SENSORS	P06		
			11	20	43	8A				TAPE DECK PERIPHERY CONTR.	J04		1.820.762.00
			11	44	1	8				FROM GRP20, ELM06	P01		
TD-SL2			11	20	46	4				MP-UNIT TO CONTROL	J07		1.820.785.00
TD-SL3			11	20	43	14B				TAPE DECK PERIPHERY CONTR.	J04		1.820.762.00
			11	20	46	3				MP-UNIT TO CONTROL	J07		1.820.785.00
TD-SL4			11	20	45	23				SPOOLING MOTOR CONTROLLER	J06		1.820.760.00
			11	20	46	23				MP-UNIT TO CONTROL	J07		1.820.785.00
TD-SL5			11	20	46	24				MP-UNIT TO CONTROL	J07		1.820.785.00
			11	20	47	25				TAPE DECK SERIAL INTERFACE	J08		1.820.763.00
TD-SL6			11	20	44	25				TAPE DECK COUNTER / TIMER	J05		1.820.761.00
			11	20	46	25				MP-UNIT TO CONTROL	J07		1.820.785.00
TD-SL7			11	20	42	14B				CAPSTAN INTERFACE	J03		1.820.727.00
			11	20	46	15				MP-UNIT TO CONTROL	J07		1.820.785.00
TD-TCM1			11	20	3	8				CAPSTAN MOTOR DRIVE AMPLIFIER	P03		
			11	20	41	1				CAPSTAN CONTROL UNIT	J02		1.820.764.00
			11	20	42	1B				CAPSTAN INTERFACE	J03		1.820.727.00
			11	38	1	8		F		FROM GRP39, ELM02	J01		
			11	39	1	8				FROM GRP20, ELM03	P01		
			11	39	2	8		M		TO GRP38, ELM01	P02		
TD-TCM2			11	20	3	10				CAPSTAN MOTOR DRIVE AMPLIFIER	P03		
			11	20	41	2				CAPSTAN CONTROL UNIT	J02		1.820.764.00
			11	20	42	2B				CAPSTAN INTERFACE	J03		1.820.727.00
			11	38	1	11		F		FROM GRP39, ELM02	J01		
			11	39	1	10				FROM GRP20, ELM03	P01		
			11	39	2	11		M		TO GRP38, ELM01	P02		
TD-TML1			11	20	9	9				TACHO SENSOR (SPOOLING M. LEFT)	P09		
			11	20	44	1				TAPE DECK COUNTER / TIMER	J05		1.820.761.00
			11	36	1	9				TACHO SENSOR	P01		1.820.771.00
TD-TML2			11	20	9	8				TACHO SENSOR (SPOOLING M. LEFT)	P09		
			11	20	44	2				TAPE DECK COUNTER / TIMER	J05		1.820.761.00
			11	36	1	8				TACHO SENSOR	P01		1.820.771.00

PUBLISHED: 12/86

* WILLI STUDER AG * S I G N A L W I R E L I S T * 86/12/08 * 10:54 * P A G E 180 *

* 1.861.022.00 D820X PCM RECORDER * 86/08/27 - 00 *

SIGNAL NAME	COLOR	MI	ASY	GRP	ELM	PNT	S	LV	TYPE	DESCRIPTION OF ELEMENT	REMARK	ELEMENT NR.
TD-TMR1			11	20	10	9				TACHO SENSOR (SPOOLING M. RIGHT)	P10	
			11	20	44	3				TAPE DECK COUNTER / TIMER	J05	1.820.761.00
			11	37	1	9				TACHO SENSOR	P01	1.820.771.00
TD-TMR2			11	20	10	8				TACHO SENSOR (SPOOLING M. RIGHT)	P10	
			11	20	44	4				TAPE DECK COUNTER / TIMER	J05	1.820.761.00
			11	37	1	8				TACHO SENSOR	P01	1.820.771.00
TD-TRSP			11	20	6	9				EXT. SENSORS	P06	
			11	20	43	9A				TAPE DECK PERIPHERY CONTR.	J04	1.820.762.00
			11	44	1	9				FROM GRP20, ELM06	P01	
TD-TRSPR			11	20	6	10				EXT. SENSORS	P06	
			11	44	1	10				FROM GRP20, ELM06	P01	
TD-TX			11	20	46	11				MP-UNIT TD CONTROL	J07	1.820.785.00
TD-YTRSP			11	20	6	7				EXT. SENSORS	P06	
			11	44	1	7				FROM GRP20, ELM06	P01	
TDECDASY			4	1	9	24B				CODEC MEMORY		1.861.858.00
			4	1	10	21B				TRANSFORMATTER		1.861.859.00
TDMPRES			2	1	4	5A				DETECTOR		1.861.804.00
			2	1	6	5A				TAPE DECK MONITOR		1.861.802.00
TDPHO1			2	4	2	4				INTERNAL PHONE CONNECTOR J2 (CIS)		1.861.802.00
			2	6	1	1				INTERNAL PHONE PLUG (SOLD.)		54.240.102.00
TDPHO2			2	4	2	5				INTERNAL PHONE CONNECTOR J2 (CIS)		1.861.802.00
			2	6	1	2				INTERNAL PHONE PLUG (SOLD.)		54.240.102.00
TDS-CLK			11	20	30	2				SSCA INT. SYNCHRONIZER	P20	
			11	20	47	17				TAPE DECK SERIAL INTERFACE	J08	1.820.763.00
			11	20	48	19A				MASTER SERIAL INTERFACE	J09	1.820.753.00
TDS-CTS			11	20	47	16				TAPE DECK SERIAL INTERFACE	J08	1.820.763.00
			11	20	48	11B				MASTER SERIAL INTERFACE	J09	1.820.753.00
TDS-DTR			11	20	47	15				TAPE DECK SERIAL INTERFACE	J08	1.820.763.00
			11	20	48	11A				MASTER SERIAL INTERFACE	J09	1.820.753.00
TDS-RX			11	20	47	13				TAPE DECK SERIAL INTERFACE	J08	1.820.763.00
			11	20	48	10A				MASTER SERIAL INTERFACE	J09	1.820.753.00
TDS-TX			11	20	47	14				TAPE DECK SERIAL INTERFACE	J08	1.820.763.00
			11	20	48	10B				MASTER SERIAL INTERFACE	J09	1.820.753.00
TDSPE1			2	4	1	1				INTERNAL SPEAKER CONNECTOR J1 (CIS)		1.861.802.00
			2	4	1	3				INTERNAL SPEAKER CONNECTOR J1 (CIS)		1.861.802.00
			2	5	1	1				INTERNAL SPEAKER (SOLD.)		71.010.108.00
TDSP1GND			2	4	1	2				INTERNAL SPEAKER CONNECTOR J1 (CIS)		1.861.802.00
			2	5	1	2				INTERNAL SPEAKER (SOLD.)		71.010.108.00
TEST1			4	1	12	12C				RT/TC CODEC		1.861.861.00

* WILLI STUDER AG * S I G N A L W I R E L I S T * 86/12/08 * 10:54 * P A G E 181 *

* 1.861.022.00 D820X PCM RECORDER * 86/08/27 - 00 *

SIGNAL NAME	COLOR	MI	ASY	GRP	ELM	PNT	S	LV	TYPE	DESCRIPTION OF ELEMENT	REMARK	ELEMENT NR.
TFORMENC			4	1	9	24A				CODEC MEMORY		1.861.858.00
			4	1	10	21A				TRANSFORMATTER		1.861.859.00
TIREFEXT			1	73	1	7				BOX-RACK 1 (RACK) (25 PIN D-SUB)		1.861.583.00
			1	80	14	7				BOX-RACK 1 TO REAR PANEL TO		
			1	80	21	14				RACK-TAPE DECK (SERVO)(26 PIN FLAT)		
			4	1	13	16B				TIMING + TEST		1.861.862.00
			4	1	17	7				CONNECTER 2 (BACKPANEL RACK 1)		
			4	1	50	7				BOX-RACK 1 CONNECTOR (CABLE)		
			11	20	32	14				TO ASSY1, GR80, EL21	P24	
			11	20	51	9B				MASTER SYSCON INTERFACE	J12	1.861.721.00
TIREFINT			1	73	1	6				BOX-RACK 1 (RACK) (25 PIN D-SUB)		1.861.583.00
			1	80	14	6				BOX-RACK 1 TO REAR PANEL TO		
			1	80	21	10				RACK-TAPE DECK (SERVO)(26 PIN FLAT)		
			4	1	10	10B				TRANSFORMATTER		1.861.859.00
			4	1	17	6				CONNECTER 2 (BACKPANEL RACK 1)		
			4	1	50	6				BOX-RACK 1 CONNECTOR (CABLE)		
			11	20	32	10				TO ASSY1, GR80, EL21	P24	
			11	20	51	7B				MASTER SYSCON INTERFACE	J12	1.861.721.00
TL-A0			11	50	4	6				CONNECTER LCD DISPLAY UNIT	P04	
			11	52	1	6				FROM GRP50, ELM04		
TL-CS			11	50	4	3				CONNECTER LCD DISPLAY UNIT	P04	
			11	52	1	3				FROM GRP50, ELM04		
TL-D0			11	50	4	7				CONNECTER LCD DISPLAY UNIT	P04	
			11	52	1	7				FROM GRP50, ELM04		
TL-D1			11	50	4	8				CONNECTER LCD DISPLAY UNIT	P04	
			11	52	1	8				FROM GRP50, ELM04		
TL-D2			11	50	4	9				CONNECTER LCD DISPLAY UNIT	P04	
			11	52	1	9				FROM GRP50, ELM04		
TL-D3			11	50	4	10				CONNECTER LCD DISPLAY UNIT	P04	
			11	52	1	10				FROM GRP50, ELM04		
TL-D4			11	50	4	11				CONNECTER LCD DISPLAY UNIT	P04	
			11	52	1	11				FROM GRP50, ELM04		
TL-D5			11	50	4	12				CONNECTER LCD DISPLAY UNIT	P04	
			11	52	1	12				FROM GRP50, ELM04		
TL-D6			11	50	4	13				CONNECTER LCD DISPLAY UNIT	P04	
			11	52	1	13				FROM GRP50, ELM04		
TL-D7			11	50	4	14				CONNECTER LCD DISPLAY UNIT	P04	
			11	52	1	14				FROM GRP50, ELM04		
TL-ENB			11	50	4	4				CONNECTER LCD DISPLAY UNIT	P04	
			11	52	1	4				FROM GRP50, ELM04		
TL-RESET			11	50	4	15				CONNECTER LCD DISPLAY UNIT	P04	
			11	52	1	15				FROM GRP50, ELM04		

PUBLISHED: 12/86

WILLI STUDER AG * S I G N A L W I R E L I S T * 86/12/08 * 10:54 * P A G E 182

1.861.022.00 D820X PCM RECORDER * 86/08/27 - 00

SIGNAL NAME	COLOR	MI	ASY	GRP	ELM	PNT	S	LV	TYPE	DESCRIPTION OF ELEMENT		REMARK	ELEMENT NR.
TL-WR			11	50	4	5				CONNECTOR LCD DISPLAY UNIT	P04		
			11	52	1	5				FROM GRP50, ELM04			
TM-A			11	50	2	20				CONNECTOR COMMAND UNIT	P03		
			11	51	1	20				FROM GRP50,ELM02			
TM-ADR0			11	20	48	28B				MASTER SERIAL INTERFACE	J09		1.820.753.00
			11	20	49	31				MP-UNIT MASTER	J10		1.820.786.00
			11	20	50	31				SMPTE/EBU INTERFACE	J11		1.820.751.00
			11	20	51	24A				MASTER SYSCON INTERFACE	J12		1.861.721.00
TM-ADR1			11	20	48	28A				MASTER SERIAL INTERFACE	J09		1.820.753.00
			11	20	49	30				MP-UNIT MASTER	J10		1.820.786.00
			11	20	50	30				SMPTE/EBU INTERFACE	J11		1.820.751.00
			11	20	51	23A				MASTER SYSCON INTERFACE	J12		1.861.721.00
TM-ADR2			11	20	48	27B				MASTER SERIAL INTERFACE	J09		1.820.753.00
			11	20	49	29				MP-UNIT MASTER	J10		1.820.786.00
			11	20	50	29				SMPTE/EBU INTERFACE	J11		1.820.751.00
			11	20	51	22A				MASTER SYSCON INTERFACE	J12		1.861.721.00
TM-ADR3			11	20	48	23B				MASTER SERIAL INTERFACE	J09		1.820.753.00
			11	20	49	6				MP-UNIT MASTER	J10		1.820.786.00
			11	20	50	17				SMPTE/EBU INTERFACE	J11		1.820.751.00
TM-B			11	50	2	18				CONNECTOR COMMAND UNIT	P03		
			11	51	1	18				FROM GRP50.ELM02			
TM-BUSSW			11	20	49	8				MP-UNIT MASTER	J10		1.820.786.00
			11	20	50	15				SMPTE/EBU INTERFACE	J11		1.820.751.00
TM-C			11	50	2	21				CONNECTOR COMMAND UNIT	P03		
			11	51	1	21				FROM GRP50.ELM02			
TM-CUE1			11	48	1	20				FROM GRP50, ELM03			
			11	48	2	5				CONNECTOR EDIT ASSEMBLY			
			11	49	1	5				FROM GRP48, ELM02			
			11	50	3	20				CONNECTOR PUSHBUTTON ASSEMBLY	P02		
TM-CUE2			11	48	1	22				FROM GRP50, ELM03			
			11	48	2	7				CONNECTOR EDIT ASSEMBLY			
			11	49	1	7				FROM GRP48, ELM02			
			11	50	3	22				CONNECTOR PUSHBUTTON ASSEMBLY	P02		
TM-C307K			11	20	49	22				MP-UNIT MASTER	J10		1.82C.786.00
TM-C76K			11	20	49	16				MP-UNIT MASTER	J10		1.82C.786.00
TM-D			11	50	2	22				CONNECTOR COMMAND UNIT	P03		
			11	51	1	22				FROM GRP50.ELM02			
TM-DADR0			11	20	15	19				DISPLAY DRIVER	P15		
			11	20	16	19				PARALLEL REMOTE CONTROL	P16		
			11	20	48	8A				MASTER SERIAL INTERFACE	J09		1.820.753.00
			11	27	2	19				FROM GRP20, ELM16	P02		
			11	50	1	19				FROM GRP20, ELM15	P01		

WILLI STUDER AG * S I G N A L W I R E L I S T * 86/12/08 * 10:54 * P A G E 183

1.861.022.00 D820X PCM RECORDER * 86/08/27 - 00

SIGNAL NAME	COLOR	MI	ASY	GRP	ELM	PNT	S	LV	TYPE	DESCRIPTION OF ELEMENT		REMARK	ELEMENT NR.
TM-DADR1			11	20	15	17				DISPLAY DRIVER	P15		
			11	20	48	7A				MASTER SERIAL INTERFACE	J09		1.820.753.00
			11	50	1	17				FROM GRP20, ELM15	P01		
TM-DADR2			11	20	15	15				DISPLAY DRIVER	P15		
			11	20	48	6A				MASTER SERIAL INTERFACE	J09		1.820.753.00
			11	50	1	15				FROM GRP20, ELM15	P01		
TM-DATA0			11	20	15	39				DISPLAY DRIVER	P15		
			11	20	16	39				PARALLEL REMOTE CONTROL	P16		
			11	20	48	32B				MASTER SERIAL INTERFACE	J09		1.820.753.00
			11	20	49	39				MP-UNIT MASTER	J10		1.820.786.00
			11	20	50	39				SMPTE/EBU INTERFACE	J11		1.820.751.00
			11	20	51	32A				MASTER SYSCON INTERFACE	J12		1.861.721.00
			11	27	2	39				FROM GRP20, ELM16	P02		
			11	50	1	39				FROM GRP20, ELM15	P01		
TM-DATA1			11	20	15	37				DISPLAY DRIVER	P15		
			11	20	16	37				PARALLEL REMOTE CONTROL	P16		
			11	20	48	32A				MASTER SERIAL INTERFACE	J09		1.820.753.00
			11	20	49	38				MP-UNIT MASTER	J10		1.820.786.00
			11	20	50	38				SMPTE/EBU INTERFACE	J11		1.820.751.00
			11	20	51	31A				MASTER SYSCON INTERFACE	J12		1.861.721.00
			11	27	2	37				FROM GRP20, ELM16	P02		
			11	50	1	37				FROM GRP20, ELM15	P01		
TM-DATA2			11	20	15	35				DISPLAY DRIVER	P15		
			11	20	16	35				PARALLEL REMOTE CONTROL	P16		
			11	20	48	31B				MASTER SERIAL INTERFACE	J09		1.820.753.00
			11	20	49	37				MP-UNIT MASTER	J10		1.820.786.00
			11	20	50	37				SMPTE/EBU INTERFACE	J11		1.820.751.00
			11	20	51	30A				MASTER SYSCON INTERFACE	J12		1.861.721.00
			11	27	2	35				FROM GRP20, ELM16	P02		
			11	50	1	35				FROM GRP20, ELM15	P01		
TM-DATA3			11	20	15	33				DISPLAY DRIVER	P15		
			11	20	16	33				PARALLEL REMOTE CONTROL	P16		
			11	20	48	31A				MASTER SERIAL INTERFACE	J09		1.820.753.00
			11	20	49	36				MP-UNIT MASTER	J10		1.820.786.00
			11	20	50	36				SMPTE/EBU INTERFACE	J11		1.820.751.00
			11	20	51	29A				MASTER SYSCON INTERFACE	J12		1.861.721.00
			11	27	2	33				FROM GRP20, ELM16	P02		
			11	50	1	33				FROM GRP20, ELM15	P01		
TM-DATA4			11	20	15	31				DISPLAY DRIVER	P15		
			11	20	16	31				PARALLEL REMOTE CONTROL	P16		
			11	20	48	30B				MASTER SERIAL INTERFACE	J09		1.820.753.00
			11	20	49	35				MP-UNIT MASTER	J10		1.820.786.00
			11	20	50	35				SMPTE/EBU INTERFACE	J11		1.820.751.00
			11	20	51	28A				MASTER SYSCON INTERFACE	J12		1.861.721.00
			11	27	2	31				FROM GRP20, ELM16	P02		
			11	50	1	31				FROM GRP20, ELM15	P01		

PUBLISHED: 12/86

* WILLI STUDER AG * S I G N A L W I R E L I S T * 86/12/08 * 10:54 * P A G E 184 *

* 1.861.022.00 D820X PCM RECORDER * 86/08/27 - 00 *

SIGNAL NAME	COLOR	MI	ASY	GRP	ELM	PNT	S	LV	TYPE	DESCRIPTION OF ELEMENT		REMARK	ELEMENT NR.
TM-DATA5			11	20	15	29				DISPLAY DRIVER	P15		
			11	20	16	29				PARALLEL REMOTE CONTROL	P16		
			11	20	48	30A				MASTER SERIAL INTERFACE	J09		1.820.753.00
			11	20	49	34				MP-UNIT MASTER	J10		1.820.786.00
			11	20	50	34				SMPTE/EBU INTERFACE	J11		1.820.751.00
			11	20	51	27A				MASTER SYSCON INTERFACE	J12		1.861.721.00
			11	27	2	29				FROM GRP20. ELM16	P07		
			11	50	1	29				FROM GRP20. ELM15	P01		
TM-DATA6			11	20	15	27				DISPLAY DRIVER	P15		
			11	20	16	27				PARALLEL REMOTE CONTROL	P16		
			11	20	48	29B				MASTER SERIAL INTERFACE	J09		1.820.753.00
			11	20	49	33				MP-UNIT MASTER	J10		1.820.786.00
			11	20	50	33				SMPTE/EBU INTERFACE	J11		1.820.751.00
			11	20	51	26A				MASTER SYSCON INTERFACE	J12		1.861.721.00
			11	27	2	27				FROM GRP20. ELM16	P07		
			11	50	1	27				FROM GRP20. ELM15	P01		
TM-DATA7			11	20	15	25				DISPLAY DRIVER	P15		
			11	20	16	25				PARALLEL REMOTE CONTROL	P16		
			11	20	48	29A				MASTER SERIAL INTERFACE	J09		1.820.753.00
			11	20	49	32				MP-UNIT MASTER	J10		1.820.786.00
			11	20	50	32				SMPTE/EBU INTERFACE	J11		1.820.751.00
			11	20	51	25A				MASTER SYSCON INTERFACE	J12		1.861.721.00
			11	27	2	25				FROM GRP20. ELM16	P07		
			11	50	1	25				FROM GRP20. ELM15	P01		
TM-DENB			11	20	15	13				DISPLAY DRIVER	P15		
			11	20	16	13				PARALLEL REMOTE CONTROL	P16		
			11	20	48	5A				MASTER SERIAL INTERFACE	J09		1.820.753.00
			11	27	2	13				FROM GRP20. ELM16	P07		
			11	50	1	13				FROM GRP20. ELM15	P01		
TM-DP			11	50	2	19				CONNECTOR COMMAND UNIT	P03		
			11	51	1	19				FROM GRP50.ELM02			
TM-DRENB			11	20	49	12				MP-UNIT MASTER	J10		1.820.786.00
			11	20	50	12				SMPTE/EBU INTERFACE	J11		1.820.751.00
TM-DRES			11	20	15	9				DISPLAY DRIVER	P15		
			11	20	16	9				PARALLEL REMOTE CONTROL	P16		
			11	20	48	3A				MASTER SERIAL INTERFACE	J09		1.820.753.00
			11	27	2	9				FROM GRP20. ELM16	P07		
			11	50	1	9				FROM GRP20. ELM15	P01		
TM-DRW			11	20	15	11				DISPLAY DRIVER	P15		
			11	20	16	11				PARALLEL REMOTE CONTROL	P16		
			11	20	48	4A				MASTER SERIAL INTERFACE	J09		1.820.753.00
			11	27	2	11				FROM GRP20. ELM16	P07		
			11	50	1	11				FROM GRP20. ELM15	P01		
TM-DSL4			11	20	15	7				DISPLAY DRIVER	P15		
			11	20	48	1A				MASTER SERIAL INTERFACE	J09		1.820.753.00
			11	50	1	7				FROM GRP20. ELM15	P01		

* WILLI STUDER AG * S I G N A L W I R E L I S T * 86/12/08 * 10:54 * P A G E 185 *

* 1.861.022.00 D820X PCM RECORDER * 86/08/27 - 00 *

SIGNAL NAME	COLOR	MI	ASY	GRP	ELM	PNT	S	LV	TYPE	DESCRIPTION OF ELEMENT		REMARK	ELEMENT NR.
TM-DSL5			11	20	16	7				PARALLEL REMOTE CONTROL	P16		
			11	20	48	2A				MASTER SERIAL INTERFACE	J09		1.820.753.00
			11	27	2	7				FROM GRP20. ELM16	P02		
TM-D0			11	50	2	35				CONNECTOR COMMAND UNIT	P03		
			11	51	1	35				FROM GRP50.ELM02			
TM-D1			11	50	2	34				CONNECTOR COMMAND UNIT	P03		
			11	51	1	34				FROM GRP50.ELM02			
TM-D2			11	50	2	33				CONNECTOR COMMAND UNIT	P03		
			11	51	1	33				FROM GRP50.ELM02			
TM-D3			11	50	2	32				CONNECTOR COMMAND UNIT	P03		
			11	51	1	32				FROM GRP50.ELM02			
TM-D4			11	50	2	31				CONNECTOR COMMAND UNIT	P03		
			11	51	1	31				FROM GRP50.ELM02			
TM-D5			11	50	2	30				CONNECTOR COMMAND UNIT	P03		
			11	51	1	30				FROM GRP50.ELM02			
TM-D6			11	50	2	29				CONNECTOR COMMAND UNIT	P03		
			11	51	1	29				FROM GRP50.ELM02			
TM-D7			11	50	2	28				CONNECTOR COMMAND UNIT	P03		
			11	51	1	28				FROM GRP50.ELM02			
TM-D8			11	50	2	27				CONNECTOR COMMAND UNIT	P03		
			11	51	1	27				FROM GRP50.ELM02			
TM-D9			11	50	2	26				CONNECTOR COMMAND UNIT	P03		
			11	51	1	26				FROM GRP50.ELM02			
TM-E			11	50	2	24				CONNECTOR COMMAND UNIT	P03		
			11	51	1	24				FROM GRP50.ELM02			
TM-ENB			11	20	48	27A				MASTER SERIAL INTERFACE	J09		1.820.753.00
			11	20	49	28				MP-UNIT MASTER	J10		1.820.786.00
			11	20	50	28				SMPTE/EBU INTERFACE	J11		1.820.751.00
			11	20	51	21A				MASTER SYSCON INTERFACE	J12		1.861.721.00
TM-ENO			11	48	1	12				FROM GRP50. ELM03			
			11	48	2	4				CONNECTOR EDIT ASSEMBLY			
			11	49	1	4				FROM GRP48. ELM02			
			11	49	2	2				WIRE FIELD			
			11	50	3	12				CONNECTOR PUSHBUTTON ASSEMBLY	P02		
TM-EN1			11	50	2	9				CONNECTOR COMMAND UNIT	P03		
			11	51	1	9				FROM GRP50.ELM02			
TM-EN2			11	50	2	8				CONNECTOR COMMAND UNIT	P03		
			11	51	1	8				FROM GRP50.ELM02			
TM-EN3			11	50	2	7				CONNECTOR COMMAND UNIT	P03		
			11	51	1	7				FROM GRP50.ELM02			

PUBLISHED: 12/86

WILLI STUDER AG * S I G N A L W I R E L I S T * 86/12/08 * 10:54 * P A G E 186

1.861.022.00 D82OX PCM RECORDER * 86/08/27 - 00

SIGNAL NAME	COLOR	MI	ASY	GRP	ELM	PNT	S	LV	TYPE	DESCRIPTION OF ELEMENT		REMARK	ELEMENT NR.
TM-EN4			11	50	2	6				CONNECTOR COMMAND UNIT	P03		
			11	51	1	6				FROM GRP50.ELM02			
TM-F			11	50	2	23				CONNECTOR COMMAND UNIT	P03		
			11	51	1	23				FROM GRP50.ELM02			
TM-G			11	50	2	25				CONNECTOR COMMAND UNIT	P03		
			11	51	1	25				FROM GRP50.ELM02			
TM-IADR0			11	20	15	20				DISPLAY DRIVER	P15		
			11	20	16	20				PARALLEL REMOTE CONTROL	P16		
			11	20	48	8B				MASTER SERIAL INTERFACE	J09		1.820.753.00
			11	27	2	20				FROM GRP20. ELM16	P02		
			11	50	1	20				FROM GRP20. ELM15	P01		
TM-IADR1			11	20	15	18				DISPLAY DRIVER	P15		
			11	20	48	7B				MASTER SERIAL INTERFACE	J09		1.820.753.00
			11	50	1	18				FROM GRP20. ELM15	P01		
TM-IADR2			11	20	15	16				DISPLAY DRIVER	P15		
			11	20	48	6B				MASTER SERIAL INTERFACE	J09		1.820.753.00
			11	50	1	16				FROM GRP20. ELM15	P01		
TM-IENB			11	20	15	14				DISPLAY DRIVER	P15		
			11	20	16	14				PARALLEL REMOTE CONTROL	P16		
			11	20	48	5B				MASTER SERIAL INTERFACE	J09		1.820.753.00
			11	27	2	14				FROM GRP20. ELM16	P02		
			11	50	1	14				FROM GRP20. ELM15	P01		
TM-IRES			11	20	15	10				DISPLAY DRIVER	P15		
			11	20	16	10				PARALLEL REMOTE CONTROL	P16		
			11	20	48	3B				MASTER SERIAL INTERFACE	J09		1.820.753.00
			11	27	2	10				FROM GRP20. ELM16	P02		
			11	50	1	10				FROM GRP20. ELM15	P01		
TM-IRQ			11	20	48	24B				MASTER SERIAL INTERFACE	J09		1.820.753.00
			11	20	49	13				MP-UNIT MASTER	J10		1.820.786.00
TM-IRW			11	20	15	12				DISPLAY DRIVER	P15		
			11	20	16	12				PARALLEL REMOTE CONTROL	P16		
			11	20	48	4B				MASTER SERIAL INTERFACE	J09		1.820.753.00
			11	27	2	12				FROM GRP20. ELM16	P02		
			11	50	1	12				FROM GRP20. ELM15	P01		
TM-ISL4			11	20	15	8				DISPLAY DRIVER	P15		
			11	20	48	1B				MASTER SERIAL INTERFACE	J09		1.820.753.00
			11	50	1	8				FROM GRP20. ELM15	P01		
TM-ISL5			11	20	16	8				PARALLEL REMOTE CONTROL	P16		
			11	20	48	2B				MASTER SERIAL INTERFACE	J09		1.820.753.00
			11	27	2	8				FROM GRP20. ELM16	P02		
TM-KBIR			11	20	15	23				DISPLAY DRIVER	P15		
			11	20	48	14B				MASTER SERIAL INTERFACE	J09		1.820.753.00
			11	50	1	23				FROM GRP20. ELM15	P01		

WILLI STUDER AG * S I G N A L W I R E L I S T * 86/12/08 * 10:54 * P A G E 187

1.861.022.00 D82OX PCM RECORDER * 86/08/27 - 00

SIGNAL NAME	COLOR	MI	ASY	GRP	ELM	PNT	S	LV	TYPE	DESCRIPTION OF ELEMENT		REMARK	ELEMENT NR.
TM-L1			11	50	2	37				CONNECTOR COMMAND UNIT	P03		
			11	51	1	37				FROM GRP50.ELM02			
TM-L2			11	50	2	36				CONNECTOR COMMAND UNIT	P03		
			11	51	1	36				FROM GRP50.ELM02			
TM-L3			11	50	2	38				CONNECTOR COMMAND UNIT	P03		
			11	51	1	38				FROM GRP50.ELM02			
TM-NMI			11	20	49	9				MP-UNIT MASTER	J10		1.820.786.00
TM-P14B			11	20	49	1				MP-UNIT MASTER	J10		1.820.786.00
TM-P15B			11	20	49	2				MP-UNIT MASTER	J10		1.820.786.00
TM-REMIR			11	20	16	21				PARALLEL REMOTE CONTROL	P16		
			11	20	48	19B				MASTER SERIAL INTERFACE	J09		1.820.753.00
			11	27	2	21				FROM GRP20. ELM16	P02		
TM-RES			11	20	48	24A				MASTER SERIAL INTERFACE	J09		1.820.753.00
			11	20	50	26				SMPTE/EBU INTERFACE	J11		1.820.751.00
			11	20	51	19A				MASTER SYSCON INTERFACE	J12		1.861.721.00
TM-RESET			11	20	48	26A				MASTER SERIAL INTERFACE	J09		1.820.753.00
			11	20	49	26				MP-UNIT MASTER	J10		1.820.786.00
TM-RESMP			11	20	48	23A				MASTER SERIAL INTERFACE	J09		1.820.753.00
			11	20	49	5				MP-UNIT MASTER	J10		1.820.786.00
TM-RL0			11	50	2	12				CONNECTOR COMMAND UNIT	P03		
			11	51	1	12				FROM GRP50.ELM02			
TM-RL1			11	48	1	19				FROM GRP50. ELM03			
			11	48	2	6				CONNECTOR EDIT ASSEMBLY			
			11	49	1	6				FROM GRP48. ELM02			
			11	49	2	4				WIRE FIELD			
			11	50	2	13				CONNECTOR COMMAND UNIT	P03		
			11	50	3	19				CONNECTOR PUSHBUTTON ASSEMBLY	P02		
			11	51	1	13				FROM GRP50.ELM02			
TM-RL2			11	48	1	18				FROM GRP50. ELM03			
			11	50	2	14				CONNECTOR COMMAND UNIT	P03		
			11	50	3	18				CONNECTOR PUSHBUTTON ASSEMBLY	P02		
			11	51	1	14				FROM GRP50.ELM02			
TM-RL3			11	48	1	17				FROM GRP50. ELM03			
			11	50	2	15				CONNECTOR COMMAND UNIT	P03		
			11	50	3	17				CONNECTOR PUSHBUTTON ASSEMBLY	P02		
			11	51	1	15				FROM GRP50.ELM02			
TM-RL4			11	48	1	16				FROM GRP50. ELM03			
			11	50	2	16				CONNECTOR COMMAND UNIT	P03		
			11	50	3	16				CONNECTOR PUSHBUTTON ASSEMBLY	P02		
			11	51	1	16				FROM GRP50.ELM02			

PUBLISHED: 12/86

* WILLI STUDER AG * S I G N A L W I R E L I S T * 86/12/08 * 10:54 * P A G E 188 *
* 1.861.022.00 D820X PCM RECORDER * 86/08/27 - 00 *

SIGNAL NAME	COLOR	MI	ASY	GRP	ELM	PNT	S	LV	TYPE	DESCRIPTION OF ELEMENT		REMARK	ELEMENT NR.
TM-RL5			11	48	1	15				FROM GRP50. ELM03			
			11	50	2	17				CONNECTOR COMMAND UNIT	P03		
			11	50	3	15				CONNECTOR PUSHBUTTON ASSEMBLY	P02		
			11	51	1	17				FROM GRP50.ELM02			
TM-RL6			11	48	1	14				FROM GRP50. ELM03			
			11	50	2	10				CONNECTOR COMMAND UNIT	P03		
			11	50	3	14				CONNECTOR PUSHBUTTON ASSEMBLY	P02		
			11	51	1	10				FROM GRP50.ELM02			
TM-RL7			11	48	1	13				FROM GRP50. ELM03			
			11	50	2	11				CONNECTOR COMMAND UNIT	P03		
			11	50	3	13				CONNECTOR PUSHBUTTON ASSEMBLY	P02		
			11	51	1	11				FROM GRP50.ELM02			
TM-RW			11	20	48	26B				MASTER SERIAL INTERFACE	J09		1.820.753.00
			11	20	49	27				MP-UNIT MASTER	J10		1.820.786.00
			11	20	50	27				SMPTE/EBU INTERFACE	J11		1.820.751.00
			11	20	51	20A				MASTER SYSCON INTERFACE	J12		1.861.721.00
TM-RX			11	20	49	10				MP-UNIT MASTER	J10		1.820.786.00
			11	20	50	10				SMPTE/EBU INTERFACE	J11		1.820.751.00
TM-SEIR			11	20	48	2CB				MASTER SERIAL INTERFACE	J09		1.820.753.00
			11	20	50	13				SMPTE/EBU INTERFACE	J11		1.820.751.00
TM-SHIR			11	20	15	21				DISPLAY DRIVER	P15		
			11	20	48	14A				MASTER SERIAL INTERFACE	J09		1.820.753.00
			11	50	1	21				FROM GRP20. ELM15	P01		
TM-SL2			11	20	48	22B				MASTER SERIAL INTERFACE	J09		1.820.753.00
			11	20	49	4				MP-UNIT MASTER	J10		1.820.786.00
TM-SL3			11	20	49	3				MP-UNIT MASTER	J10		1.820.786.00
			11	20	50	1E				SMPTE/EBU INTERFACE	J11		1.820.751.00
TM-SL4			11	20	48	9A				MASTER SERIAL INTERFACE	J09		1.820.753.00
			11	20	49	23				MP-UNIT MASTER	J10		1.820.786.00
			11	20	50	23				SMPTE/EBU INTERFACE	J11		1.820.751.00
TM-SL5			11	20	48	9B				MASTER SERIAL INTERFACE	J09		1.820.753.00
			11	20	49	24				MP-UNIT MASTER	J10		1.820.786.00
			11	20	50	24				SMPTE/EBU INTERFACE	J11		1.820.751.00
TM-SL6			11	20	49	25				MP-UNIT MASTER	J10		1.820.786.00
			11	20	50	25				SMPTE/EBU INTERFACE	J11		1.820.751.00
			11	20	51	14A				MASTER SYSCON INTERFACE	J12		1.861.721.00
TM-SL7			11	20	49	15				MP-UNIT MASTER	J10		1.820.786.00
TM-TX			11	20	49	11				MP-UNIT MASTER	J10		1.820.786.00
			11	20	50	11				SMPTE/EBU INTERFACE	J11		1.820.751.00
TR-A			11	25	1	3			B-	CONN. AUTOLOCATOR. REMOTE TIMER	J01		
			11	26	2	5				TO GRP25. ELM01	P02		

* WILLI STUDER AG * S I G N A L W I R E L I S T * 86/12/08 * 10:54 * P A G E 189 *
* 1.861.022.00 D820X PCM RECORDER * 86/08/27 - 00 *

SIGNAL NAME	COLOR	MI	ASY	GRP	ELM	PNT	S	LV	TYPE	DESCRIPTION OF ELEMENT		REMARK	ELEMENT NR.
TR-B			11	25	1	7			B	CONN. AUTOLOCATOR. REMOTE TIMER	J01		
			11	26	2	4				TO GRP25. ELM01	P02		
TRACK11			1	80	3	18C				PDM DEMODULATOR 1			1.861.812.00
			1	80	4	18A				PDM DEMODULATOR 2			1.861.812.00
			1	80	6	19C				ANALOG ROUTING			1.861.814.00
TRACK12			1	80	3	18A				PDM DEMODULATOR 1			1.861.812.00
			1	80	6	19A				ANALOG ROUTING			1.861.814.00
TRANSA			11	20	31	3				TO GRP25. ELM04/05	P21		
			11	20	50	3				SMPTE/EBU INTERFACE	J11		1.820.751.00
			11	25	4	2			B	CONNECTOR SMPTE/EBU BUS	J04		
			11	25	5	2			B	CONNECTOR SMPTE/EBU BUS	J05		
TRANSB			11	20	31	4				TO GRP25. ELM04/05	P21		
			11	20	50	4				SMPTE/EBU INTERFACE	J11		1.820.751.00
			11	25	4	7			B	CONNECTOR SMPTE/EBU BUS	J04		
			11	25	5	7			B	CONNECTOR SMPTE/EBU BUS	J05		
TRANSCM			11	20	31	2				TO GRP25. ELM04/05	P21		
			11	20	50	2				SMPTE/EBU INTERFACE	J11		1.820.751.00
			11	25	4	6			B	CONNECTOR SMPTE/EBU BUS	J04		
			11	25	5	6			B	CONNECTOR SMPTE/EBU BUS	J05		
TREFEXT			1	73	1	20				BOX-RACK 1 (RACK) (25 PIN D-SUB)			1.861.583.00
			1	80	14	20				BOX-RACK 1 TO REAR PANEL TO			
			1	80	21	12				RACK-TAPE DECK (SERVO)(26 PIN FLAT)			
			4	1	13	16A				TIMING + TEST			1.861.862.00
			4	1	17	20				CONNECTOR 2 (BACKPANEL RACK 1)			
			4	1	50	20				BOX-RACK 1 CONNECTOR (CABLE)			
			11	20	32	12				TO ASSY1. GR80. EL21	P24		
			11	20	51	8B				MASTER SYSCON INTERFACE	J12		1.861.721.00
TREFINT			1	73	1	19				BOX-RACK 1 (RACK) (25 PIN D-SUB)			1.861.583.00
			1	80	14	19				BOX-RACK 1 TO REAR PANEL TO			
			1	80	21	8				RACK-TAPE DECK (SERVO)(26 PIN FLAT)			
			4	1	13	19A				TRANSFORMATTER			1.861.856.00
			4	1	17	19				CONNECTOR 2 (BACKPANEL RACK 1)			
			4	1	50	19				BOX-RACK 1 CONNECTOR (CABLE)			
			11	20	32	8				TO ASSY1. GR80. EL21	P24		
			11	20	51	6B				MASTER SYSCON INTERFACE	J12		1.861.721.00
TRENTEST			1	80	1	8C				CUE/PC DELAY			1.861.816.00
TRI1			4	1	13	13C				TIMING + TEST			1.861.862.00
TSTSIFRD			4	1	14	4B				SYSTEM CONTROLLER 1			1.861.763.00
			4	1	15	4B				SYSTEM CONTROLLER 2			1.861.763.00
			4	1	21	2				CONNECTOR 6 (TERMINAL)			
			4	3	12	2				TEST (TERMINAL) (RS232)			
TSTSIFTD			4	1	14	4A				SYSTEM CONTROLLER 1			1.861.763.00
			4	1	15	4A				SYSTEM CONTROLLER 2			1.861.763.00
			4	1	21	3				CONNECTOR 6 (TERMINAL)			
			4	3	12	3				TEST (TERMINAL) (RS232)			

PUBLISHED: 12/86

WILLI STUDER AG * SIGNAL WIRE LIST * 86/12/08 * 10:54 * PAGE 190

1.861.022.00 D820X PCM RECORDER * 86/08/27 - 00

SIGNAL NAME	COLOR	MI	ASY	GRP	ELM	PNT	S	LV	TYPE	DESCRIPTION OF ELEMENT	REMARK	ELEMENT NR.
TTIXLOOP			4	1	10	13A				TRANSFORMATTER		1.861.859.00
			4	1	12	7A				RT/TC CODEC		1.861.861.00
			4	1	13	13A				TIMING + TEST		1.861.862.00
TTRDEMPH			4	1	10	12C				TRANSFORMATTER		1.861.859.00
			4	1	13	12C				TIMING + TEST		1.861.862.00
TTREC			4	1	10	13B				TRANSFORMATTER		1.861.859.00
			4	1	13	13B				TIMING + TEST		1.861.862.00
TTWREMPH			4	1	10	12B				TRANSFORMATTER		1.861.859.00
			4	1	13	12B				TIMING + TEST		1.861.862.00
UREC			2	1	4	24A				DETECTOR		1.861.804.00
			2	1	5	24C				WRITE AMPLIFIER		1.861.803.00
VCLKIN			4	1	13	7A				TIMING + TEST		1.861.862.00
			4	1	19	23				CONNECTOR 4 (TC+AES+BNC)		
			4	3	15	1				VIDEO CLOCK INPUT (BNC)		
			4	3	26	1				BNC INTERCONNECTION (CIS)		1.861.776.00
VIDCLK			4	1	13	9A				TIMING + TEST		1.861.862.00
			4	1	20	16				CONNECTOR 5 (TC+EXT CLK)		
			4	3	11	16				TC + EXTERNAL CLK CONNECTOR		
VICICLK			4	1	13	9B				TIMING + TEST		1.861.862.00
			4	1	20	3				CONNECTOR 5 (TC+EXT CLK)		
			4	3	11	3				TC + EXTERNAL CLK CONNECTOR		
WDCKI			4	1	13	7C				TIMING + TEST		1.861.862.00
			4	1	19	22				CONNECTOR 4 (TC+AES+BNC)		
			4	3	14	1				CLOCK INPUT (BNC)		
			4	3	26	4				BNC INTERCONNECTION (CIS)		1.861.776.00
WDIIN			4	1	13	10B				TIMING + TEST		1.861.862.00
			4	1	20	2				CONNECTOR 5 (TC+EXT CLK)		
			4	3	11	2				TC + EXTERNAL CLK CONNECTOR		
WDIN			4	1	13	10A				TIMING + TEST		1.861.862.00
			4	1	20	15				CONNECTOR 5 (TC+EXT CLK)		
			4	3	11	15				TC + EXTERNAL CLK CONNECTOR		
WRCLK4			1	73	3	15				BOX-RACK 3 (CAGE) (25 PIN D-SUB)		1.861.583.00
			2	1	1	15				REARPANEL TC (BOX) (D-SUB 25P)		1.861.895.00
			2	1	5	19A				WRITE AMPLIFIER		1.861.803.00
			4	1	10	7A				TRANSFORMATTER		1.861.859.00
			4	1	18	15				CONNECTOR 3 (BACKPANEL RACK 3)		
			4	1	52	15				BOX-RACK 3 CONNECTOR (CABLE)		
WRDOUT			1	73	3	16				BOX-RACK 3 (CAGE) (25 PIN D-SUB)		1.861.583.00
			2	1	1	16				REARPANEL TO (BOX) (D-SUB 25P)		1.861.895.00
			2	1	5	18A				WRITE AMPLIFIER		1.861.803.00
			4	1	10	8A				TRANSFORMATTER		1.861.859.00
			4	1	18	16				CONNECTOR 3 (BACKPANEL RACK 3)		
			4	1	52	16				BOX-RACK 3 CONNECTOR (CABLE)		

WILLI STUDER AG * SIGNAL WIRE LIST * 86/12/08 * 10:54 * PAGE 191

1.861.022.00 D820X PCM RECORDER * 86/08/27 - 00

SIGNAL NAME	COLOR	MI	ASY	GRP	ELM	PNT	S	LV	TYPE	DESCRIPTION OF ELEMENT	REMARK	ELEMENT NR.
WRICLK4			1	73	3	2				BOX-RACK 3 (CAGE) (25 PIN D-SUB)		1.861.583.00
			2	1	1	2				REARPANEL TO (BOX) (D-SUB 25P)		1.861.895.00
			2	1	5	19C				WRITE AMPLIFIER		1.861.803.00
			4	1	10	7B				TRANSFORMATTER		1.861.859.00
			4	1	18	2				CONNECTOR 3 (BACKPANEL RACK 3)		
			4	1	52	2				BOX-RACK 3 CONNECTOR (CABLE)		
WRIDOUT			1	73	3	3				BOX-RACK 3 (CAGE) (25 PIN D-SUB)		1.861.583.00
			2	1	1	3				REARPANEL TO (BOX) (D-SUB 25P)		1.861.895.00
			2	1	5	18C				WRITE AMPLIFIER		1.861.803.00
			4	1	10	8B				TRANSFORMATTER		1.861.859.00
			4	1	18	3				CONNECTOR 3 (BACKPANEL RACK 3)		
			4	1	52	3				BOX-RACK 3 CONNECTOR (CABLE)		
WRISYO			1	73	3	4				BOX-RACK 3 (CAGE) (25 PIN D-SUB)		1.861.583.00
			2	1	1	4				REARPANEL TO (BOX) (D-SUB 25P)		1.861.895.00
			2	1	5	17C				WRITE AMPLIFIER		1.861.803.00
			4	1	10	9B				TRANSFORMATTER		1.861.859.00
			4	1	18	4				CONNECTOR 3 (BACKPANEL RACK 3)		
			4	1	52	4				BOX-RACK 3 CONNECTOR (CABLE)		
WRITR1			1	73	1	8				BOX-RACK 1 (RACK) (25 PIN D-SUB)		1.861.583.00
			1	80	12	6				RACK-CAGE (25 PIN D-SUB)		
			1	80	14	8				BOX-RACK 1 TO REAR PANEL TO		
			2	1	3	6				BACKPANEL RACK (D-SUB 25P)		1.861.895.00
			2	1	5	2C				WRITE AMPLIFIER		1.861.803.00
			4	1	12	11B				RT/TC CODEC		1.861.861.00
			4	1	17	8				CONNECTOR 2 (BACKPANEL RACK 1)		
			4	1	50	8				BOX-RACK 1 CONNECTOR (CABLE)		
WRITR11			1	80	1	6C				CUE/PC DELAY		1.861.814.00
			1	8C	2	4C				PDM MODULATOR		1.861.811.00
			1	8C	3	6C				PDM DEMODULATOR 1		1.861.812.00
			1	8C	12	8				RACK-CAGE (25 PIN D-SUB)		
			2	1	3	8				BACKPANEL RACK (D-SUB 25P)		1.861.895.00
			2	1	5	4C				WRITE AMPLIFIER		1.861.803.00
WRITR12			1	8C	2	5C				PDM MODULATOR		1.861.811.00
			1	8C	3	10C				PDM DEMODULATOR 1		1.861.812.00
			1	8C	4	6C				PDM DEMODULATOR 2		1.861.812.00
			1	8C	12	9				RACK-CAGE (25 PIN D-SUB)		
			2	1	3	9				BACKPANEL RACK (D-SUB 25P)		1.861.895.00
			2	1	5	5C				WRITE AMPLIFIER		1.861.803.00
WRITR2			1	73	1	9				BOX-RACK 1 (RACK) (25 PIN D-SUB)		1.861.583.00
			1	8C	12	7				RACK-CAGE (25 PIN D-SUB)		
			1	80	14	9				BOX-RACK 1 TO REAR PANEL TO		
			2	1	3	7				BACKPANEL RACK (D-SUB 25P)		1.861.895.00
			2	1	5	3C				WRITE AMPLIFIER		1.861.803.00
			4	1	12	9B				RT/TC CODEC		1.861.861.00
			4	1	17	9				CONNECTOR 2 (BACKPANEL RACK 1)		
			4	1	50	9				BOX-RACK 1 CONNECTOR (CABLE)		

PUBLISHED: 12/86

* WILLI STUDER AG * S I G N A L W I R E L I S T * 86/12/08 * 10:54 * P A G E 192 *

* 1.861.022.00 D820X PCM RECORDER * 86/08/27 - 00 *

SIGNAL NAME	COLOR	MI	ASY	GRP	ELM	PNT	S	LV	TYPE	DESCRIPTION OF ELEMENT	REMARK	ELEMENT NR.
WRSYO			1	73	3	17				BOX-RACK 3 (CAGE) (25 PIN D-SUB)		1.861.583.00
			2	1	4	17				REARPANEL TO (BOX) (D-SUB 25P)		1.861.895.00
			2	1	5	17A				WRITE AMPLIFIER		1.861.803.00
			*	1	10	9A				TRANSFORMATTER		1.861.859.00
			4	1	18	17				CONNECTOR 3 (BACKPANEL RACK 3)		
			*	1	52	17				BOX-RACK 3 CONNECTOR (CABLE)		
WRTOUT1			2	2	1	1				HEADBLOCK WRITE (P4) (D-SUB 25P)		1.861.803.00
			5	2	1	1				HEADBLOCK CONNECTOR WRITE (P4)		1.116.861.10
WRTOUT10			2	2	1	19				HEADBLOCK WRITE (P4) (D-SUB 25P)		1.861.803.00
			5	2	1	19				HEADBLOCK CONNECTOR WRITE (P4)		1.116.861.10
WRTOUT11			2	2	1	23				HEADBLOCK WRITE (P4) (D-SUB 25P)		1.861.803.00
			5	2	1	23				HEADBLOCK CONNECTOR WRITE (P4)		1.116.861.10
WRTOUT12			2	2	1	25				HEADBLOCK WRITE (P4) (D-SUB 25P)		1.861.803.00
			5	2	1	25				HEADBLOCK CONNECTOR WRITE (P4)		1.116.861.10
WRTOUT2			2	2	1	3				HEADBLOCK WRITE (P4) (D-SUB 25P)		1.861.803.00
			5	2	1	3				HEADBLOCK CONNECTOR WRITE (P4)		1.116.861.10
WRTOUT3			2	2	1	5				HEADBLOCK WRITE (P4) (D-SUB 25P)		1.861.803.00
			5	2	1	5				HEADBLOCK CONNECTOR WRITE (P4)		1.116.861.10
WRTOUT4			2	2	1	7				HEADBLOCK WRITE (P4) (D-SUB 25P)		1.861.803.00
			5	2	1	7				HEADBLOCK CONNECTOR WRITE (P4)		1.116.861.10
WRTOUT5			2	2	1	9				HEADBLOCK WRITE (P4) (D-SUB 25P)		1.861.803.00
			5	2	1	9				HEADBLOCK CONNECTOR WRITE (P4)		1.116.861.10
WRTOUT6			2	2	1	11				HEADBLOCK WRITE (P4) (D-SUB 25P)		1.861.803.00
			5	2	1	11				HEADBLOCK CONNECTOR WRITE (P4)		1.116.861.10
WRTOUT7			2	2	1	13				HEADBLOCK WRITE (P4) (D-SUB 25P)		1.861.803.00
			5	2	1	13				HEADBLOCK CONNECTOR WRITE (P4)		1.116.861.10
WRTOUT8			2	2	1	15				HEADBLOCK WRITE (P4) (D-SUB 25P)		1.861.803.00
			5	2	1	15				HEADBLOCK CONNECTOR WRITE (P4)		1.116.861.10
WRTOUT9			2	2	1	17				HEADBLOCK WRITE (P4) (D-SUB 25P)		1.861.803.00
			5	2	1	17				HEADBLOCK CONNECTOR WRITE (P4)		1.116.861.10
WRTR1			1	73	1	21				BOX-RACK 1 (RACK) (25 PIN D-SUB)		1.861.583.00
			1	8C	12	18				RACK-CAGE (25 PIN D-SUB)		
			1	8C	14	21				BOX-RACK 1 TO REAR PANEL TO		
			2	1	3	18				BACKPANEL RACK (D-SUB 25P)		1.861.895.00
			2	1	5	2A				WRITE AMPLIFIER		1.861.803.00
			4	1	12	11A				RT/TC CODEC		1.861.861.00
			4	1	17	21				CONNECTOR 2 (BACKPANEL RACK 1)		
			4	1	50	21				BOX-RACK 1 CONNECTOR (CABLE)		
WRTR10			2	1	4	9A				DETECTOR		1.861.804.00
			2	1	5	9C				WRITE AMPLIFIER		1.861.803.00

* WILLI STUDER AG * S I G N A L W I R E L I S T * 86/12/08 * 10:54 * P A G E 193 *

* 1.861.022.00 D820X PCM RECORDER * 86/08/27 - 00 *

SIGNAL NAME	COLOR	MI	ASY	GRP	ELM	PNT	S	LV	TYPE	DESCRIPTION OF ELEMENT	REMARK	ELEMENT NR.
WRTR11			1	8C	1	6A				CUE/PC DELAY		1.861.816.00
			1	8C	2	4A				PDM MODULATOR		1.861.811.00
			1	8C	3	6A				PDM DEMCDULATOR 1		1.861.812.00
			1	8C	12	20				RACK-CAGE (25 PIN D-SUB)		
			2	1	3	20				BACKPANEL RACK (D-SUB 25P)		1.861.895.00
			2	1	5	4A				WRITE AMPLIFIER		1.861.803.00
WRTR12			1	8C	2	5A				PDM MODULATOR		1.861.811.00
			1	8C	3	10A				PDM DEMCDULATOR 1		1.861.812.00
			1	8C	4	6A				PDM DEMODULATOR 2		1.861.812.00
			1	8C	12	21				RACK-CAGE (25 PIN D-SUB)		
			2	1	3	21				BACKPANEL RACK (D-SUB 25P)		1.861.895.00
			2	1	5	5A				WRITE AMPLIFIER		1.861.803.00
WRTR2			1	73	1	22				BOX-RACK 1 (RACK) (25 PIN D-SUB)		1.861.583.00
			1	8C	12	19				RACK-CAGE (25 PIN D-SUB)		
			1	8C	14	22				BOX-RACK 1 TO REAR PANEL TO		
			2	1	3	19				BACKPANEL RACK (D-SUB 25P)		1.861.895.00
			2	1	5	3A				WRITE AMPLIFIER		1.861.803.00
			4	1	12	9A				RT/TC CODEC		1.861.861.00
			4	1	17	22				CONNECTOR 2 (BACKPANEL RACK 1)		
			4	1	50	22				BOX-RACK 1 CONNECTOR (CABLE)		
WRTR3			2	1	4	6C				DETECTOR		1.861.804.00
			2	1	5	6A				WRITE AMPLIFIER		1.861.803.00
WRTR4			2	1	4	6A				DETECTOR		1.861.804.00
			2	1	5	6C				WRITE AMPLIFIER		1.861.803.00
WRTR5			2	1	4	7C				DETECTOR		1.861.804.00
			2	1	5	7A				WRITE AMPLIFIER		1.861.803.00
WRTR6			2	1	4	7A				DETECTOR		1.861.804.00
			2	1	5	7C				WRITE AMPLIFIER		1.861.803.00
WRTR7			2	1	4	8C				DETECTOR		1.861.804.00
			2	1	5	8A				WRITE AMPLIFIER		1.861.803.00
WRTR8			2	1	4	8A				DETECTOR		1.861.804.00
			2	1	5	8C				WRITE AMPLIFIER		1.861.803.00
WRTR9			2	1	4	9C				DETECTOR		1.861.804.00
			2	1	5	9A				WRITE AMPLIFIER		1.861.803.00
W0			4	1	10	14A				TRANSFORMATTER		1.861.859.00
W1			4	1	10	14B				TRANSFORMATTER		1.861.859.00
C.O VCU			11	20	15	22				DISPLAY DRIVER P15		
			11	20	15	24				DISPLAY DRIVER P15		
			11	20	15	26				DISPLAY DRIVER P15		
			11	20	15	28				DISPLAY DRIVER P15		
			11	20	15	30				DISPLAY DRIVER P15		
			11	20	15	32				DISPLAY DRIVER P15		
			11	20	15	34				DISPLAY DRIVER P15		

./.

PUBLISHED: 12/86

WILLI STUDER AG * S I G N A L W I R E L I S T * 86/12/08 * 10:54 * P A G E 194

1.861.022.00 D820X PCM RECORDER * 86/08/27 - 00

SIGNAL NAME	COLOR	MI	ASY	GRP	ELM	PNT	S	LV	TYPE	DESCRIPTION OF ELEMENT		REMARK	ELEMENT NR.
<<== CONT.OF			11	20	15	36				DISPLAY DRIVER	P15		
0.0 VCU			11	20	15	38				DISPLAY DRIVER	P15		
			11	20	15	40				DISPLAY DRIVER	P15		
			11	20	16	16				PARALLEL REMOTE CONTROL	P16		
			11	20	16	22				PARALLEL REMOTE CONTROL	P16		
			11	20	16	26				PARALLEL REMOTE CONTROL	P16		
			11	20	16	28				PARALLEL REMOTE CONTROL	P16		
			11	20	16	30				PARALLEL REMOTE CONTROL	P16		
			11	20	16	32				PARALLEL REMOTE CONTROL	P16		
			11	20	16	34				PARALLEL REMOTE CONTROL	P16		
			11	20	16	36				PARALLEL REMOTE CONTROL	P16		
			11	20	16	38				PARALLEL REMOTE CONTROL	P16		
			11	20	16	40				PARALLEL REMOTE CONTROL	P16		
			11	27	2	16				FROM GRP20. ELM16	P02		
			11	27	2	22				FROM GRP20. ELM16	P02		
			11	27	2	26				FROM GRP20. ELM16	P02		
			11	27	2	28				FROM GRP20. ELM16	P02		
			11	27	2	30				FROM GRP20. ELM16	P02		
			11	27	2	32				FROM GRP20. ELM16	P02		
			11	27	2	34				FROM GRP20. ELM16	P02		
			11	27	2	36				FROM GRP20. ELM16	P02		
			11	27	2	38				FROM GRP20. ELM16	P02		
			11	27	2	40				FROM GRP20. ELM16	P02		
			11	50	1	22				FROM GRP20. ELM15	P01		
			11	50	1	24				FROM GRP20. ELM15	P01		
			11	50	1	26				FROM GRP20. ELM15	P01		
			11	50	1	28				FROM GRP20. ELM15	P01		
			11	50	1	30				FROM GRP20. ELM15	P01		
			11	50	1	32				FROM GRP20. ELM15	P01		
			11	50	1	34				FROM GRP20. ELM15	P01		
			11	50	1	36				FROM GRP20. ELM15	P01		
			11	50	1	38				FROM GRP20. ELM15	P01		
			11	50	1	40				FROM GRP20. ELM15	P01		
0CAPHOT	4		1	79	1	23				POWER CONNECTOR (24 PIN MOLEX FEM)			
	4		1	79	2	23				POWER CONNECTOR (24 PIN MOLEX MALE)			
	4		11	11	3	4			L	RECTIFIER	DZ03		70.01.0231
	4		11	12	4	2			L	CAPACITOR	C04		59.26.7103
	4		11	12	5	9			M	CONNECTER TO GRP32. ELMC1	P01		
	4		11	19	1	23			F	FROM GRP32. ELM02	J01		
	4		11	19	2	23			M	TO GRP21. ELM02	P01		
	4		11	20	62	8			L	WIRE FIELD			
	4		11	20	62	9			L	WIRE FIELD			
	4		11	20	70	23			F	FROM GRP21. ELMC1	J13		
	4		11	20	71	1			F	TO CAPSTAN MOTOR DRIVE AMP.			
			11	32	1	9			F	INPUT FROM GRP12. ELM05	J01		
			11	32	2	23			M	OUTPUT	P01		
			11	39	3	1			M	FROM GRP20. ELM71	P03		
2ECCLK			4	1	5	25C				CAPRO INTERFACE			1.861.854.00
			4	1	13	17A				TIMING + TEST			1.A61.862.00

./.

PUBLISHED: 12/86